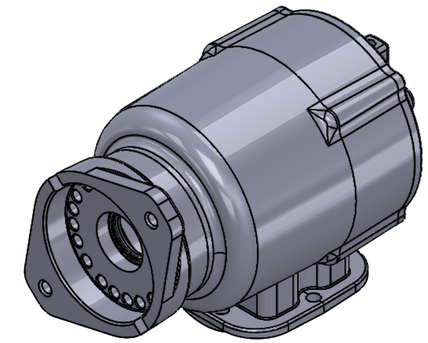

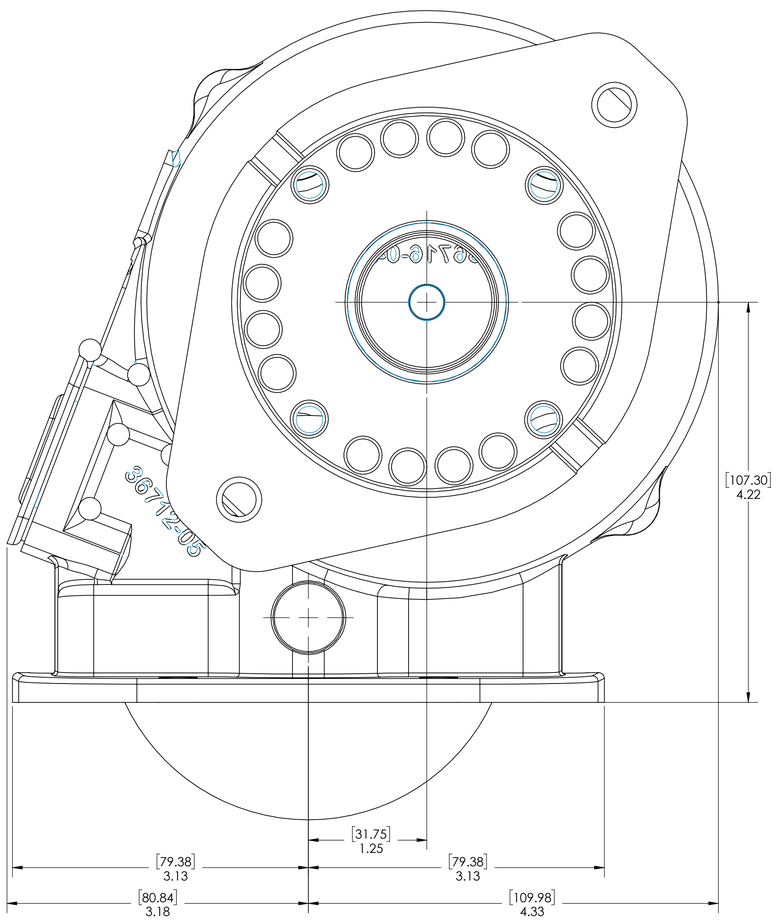

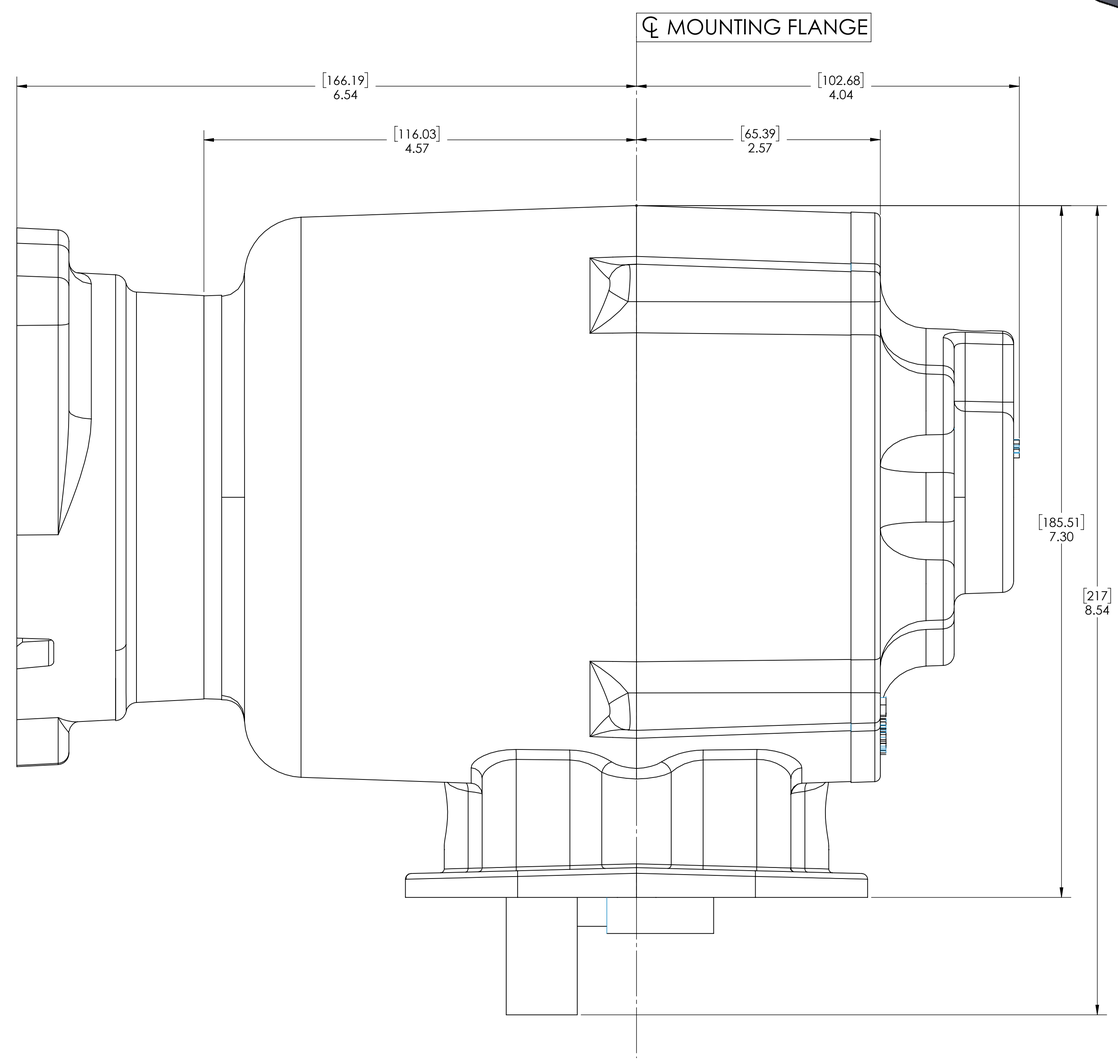

UNLESS OTHERWISE SPECIFIED:		NAME	DATE
DIMENSIONS ARE IN INCHES TOLERANCES: FRACTIONAL ± 1/16 ANGULAR: MACH ±1° BEND ±1° TWO PLACE DECIMAL ±0.030 THREE PLACE DECIMAL ±0.010	DRAWN	TT	1/17/18
	CHECKED	-	-
	ENG APPR.	-	-
FINISH 125	MFG APPR.	-	-
INTERPRET GEOMETRIC TOLERANCING PER: ASME Y14.5	Q.A.	-	-
MATERIAL	COMMENTS: -		
THIRD ANGLE PROJECTION	SIMILAR TO: -		

Muncie Power Products, Inc.

TITLE:

CS6 PTO ASSEMBLY

SIZE	DWG. NO.	REV
D	CS6S-XXXXX-X26X	00

SCALE: 1:2 | WEIGHT: | SHEET 1 OF 1

DO NOT SCALE DRAWING

PROPRIETARY AND CONFIDENTIAL THE INFORMATION CONTAINED IN THIS DRAWING IS THE SOLE PROPERTY OF MUNCIE POWER PRODUCTS, INC. ANY REPRODUCTION IN PART OR AS A WHOLE WITHOUT THE WRITTEN PERMISSION OF MUNCIE POWER PRODUCTS, INC. IS PROHIBITED.

D CS6S-XXXXX-X26X 00