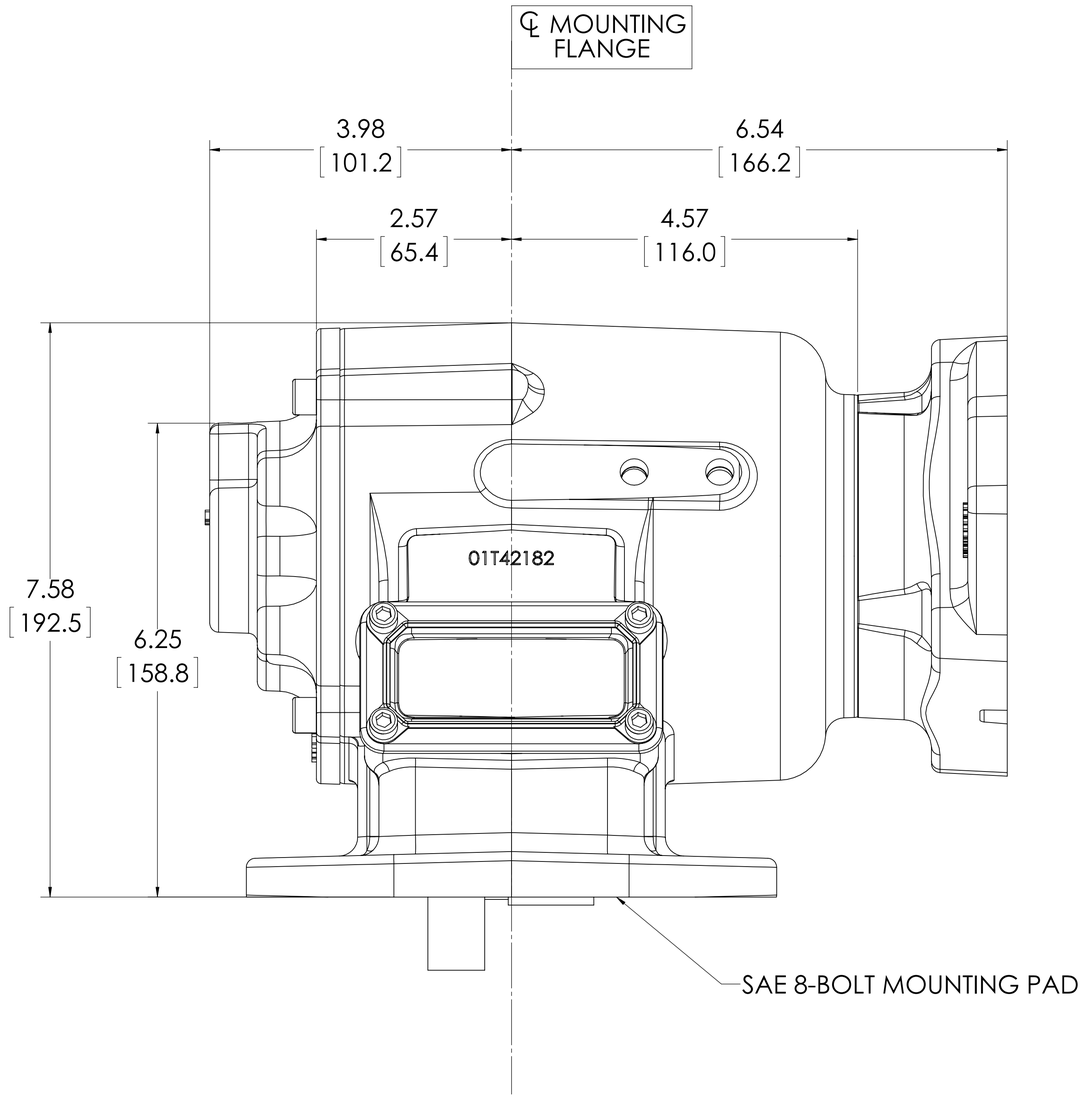

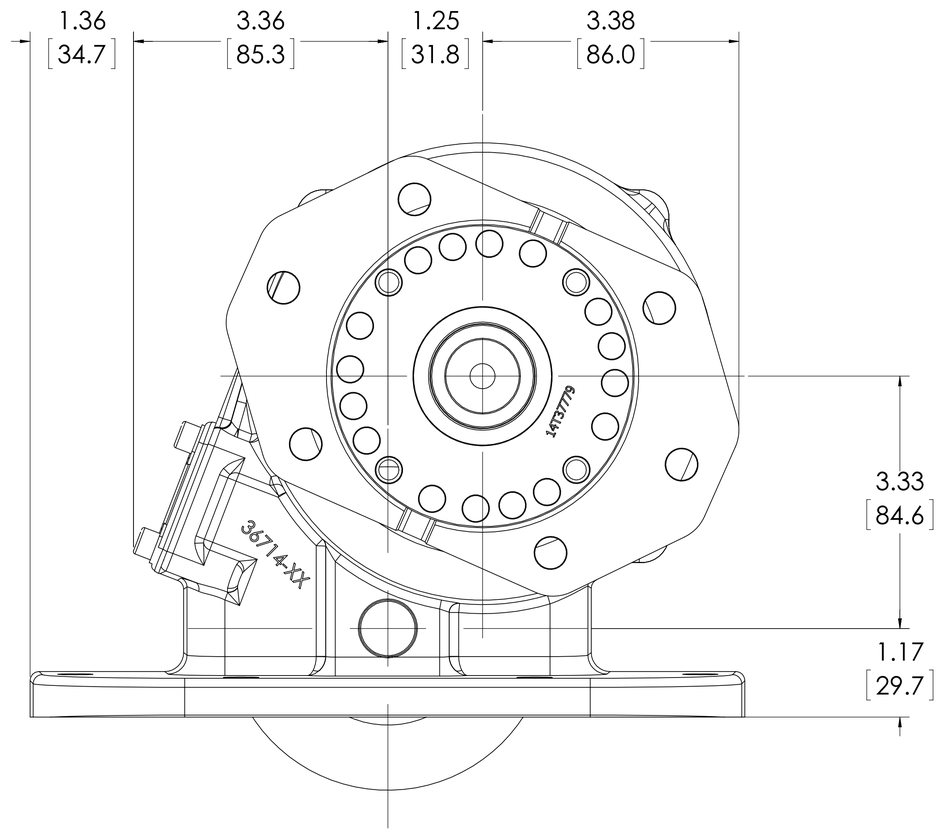

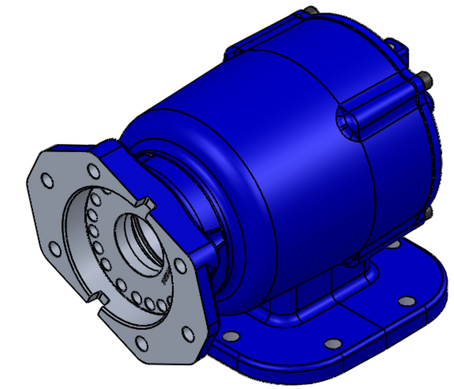

PROPRIETARY AND CONFIDENTIAL
THE INFORMATION CONTAINED IN THIS DRAWING IS THE SOLE PROPERTY OF <INSERT COMPANY NAME HERE>. ANY REPRODUCTION IN PART OR AS A WHOLE WITHOUT THE WRITTEN PERMISSION OF <INSERT COMPANY NAME HERE> IS PROHIBITED.

NEXT ASSY | USED ON
APPLICATION

UNLESS OTHERWISE SPECIFIED:
DIMENSIONS ARE IN INCHES
TOLERANCES:
FRACTIONAL ±
ANGULAR: MACH ± BEND ±
TWO PLACE DECIMAL ±
THREE PLACE DECIMAL ±
INTERPRET GEOMETRIC TOLERANCING PER:
MATERIAL
FINISH

	NAME	DATE
DRAWN	J ABBOTT	06/01/12
CHECKED	-	-
ENG APPR.		
MFG APPR.		
Q.A.		

COMMENTS:

TITLE:

SIZE D | DWG. NO. CS8S-XXXXX-X1PX | REV 00

SCALE: 1:1 | WEIGHT: | SHEET 1 OF 1

D CS8S-XXXXX-X1PX 00