# SIDE MOUNT
# ALUMINUM & STEEL TANKS

## 7/10/15/20/25/30/35/38/40 GALLONS

INSTALLATION INSTRUCTIONS AND SERVICE PARTS

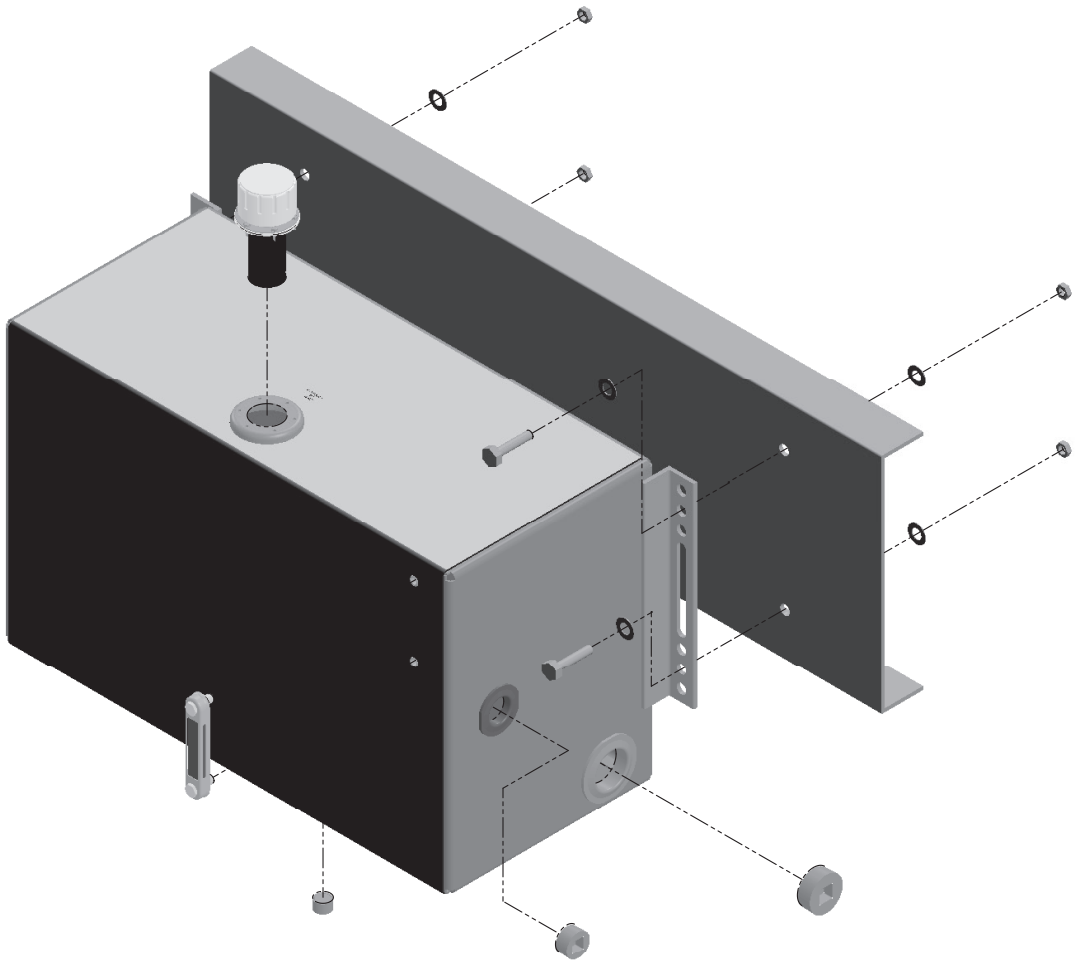

Muncie Power Products, Inc.

# Service Parts: 3 Tank Options Shown

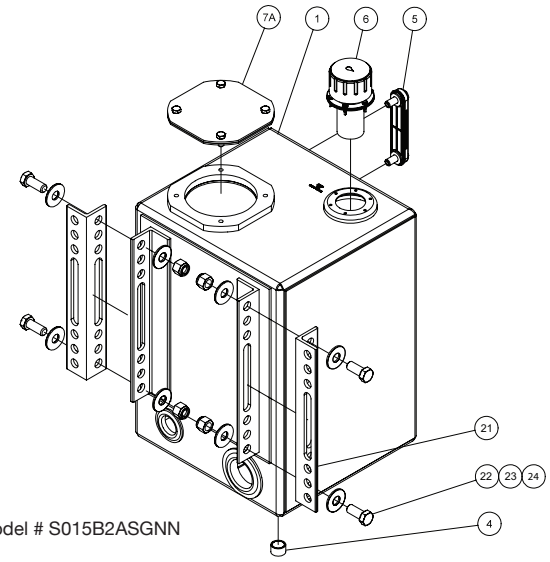


Ref. Model # S015B2ASGNN

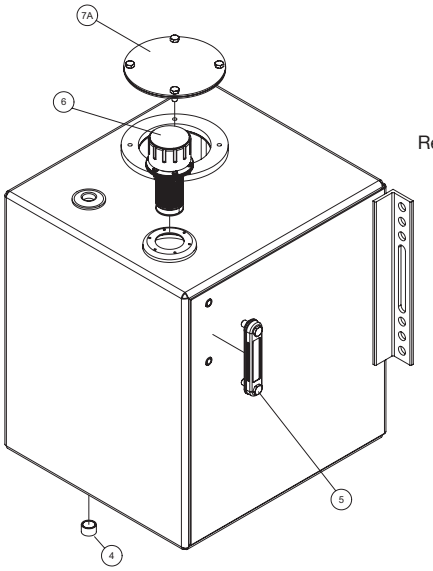


Ref. Model # S035B2AAGNY

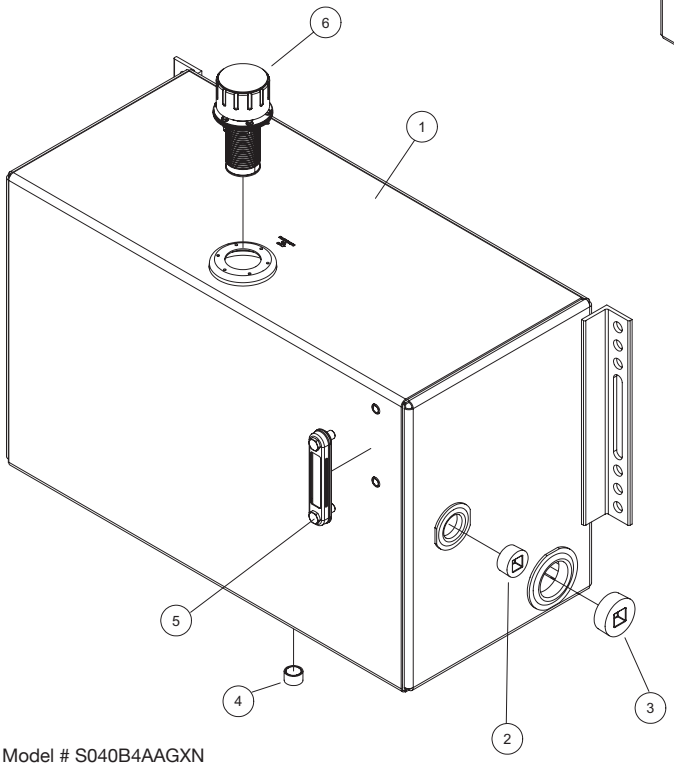


Ref. Model # S040B4AAGXN

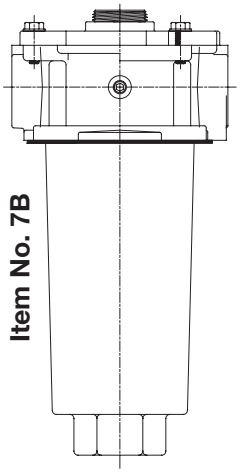

Item No. 7B

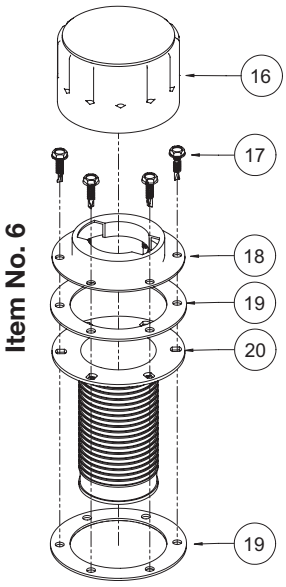


Item No. 6

# Service Parts List

| SERVICE PARTS LIST | | | |
|---|---|---|---|
| ITEM | DESCRIPTION | QTY. | PART NO. |
| 1 | Tank Body | 1 | N/A |
| 2 | 1-¼" NPT Pipe Plug<br>1" NPT Pipe Plug (7 & 10 Gal. Only) | 1 | APP1250<br>APP1000 |
| 3 | 2" NPT Pipe Plug<br>1-¼" NPT Pipe Plug (7 & 10 Gal. Only) | 1 | APP2000<br>APP1250 |
| 4 | Magnetic Plug | 1 | APP0750-M |
| 5 | Sight/Temp Gauge | 1 | ASG105 |
| 6 | Breather Cap Assembly | 1 | ISO57XL40 |
| 7A | Filter Flange Cover (Steel Tank Body) ** | 1 | AFC-507-4F |
| 7A | Filter Flange Cover (Aluminum Tank Body) ** | 1 | AFC-507-SS-4F |
| 7B | Filter Assembly *** | 1 | LIT125010P |

| SERVICE PARTS LIST | | | |
|---|---|---|---|
| ITEM | DESCRIPTION | QTY. | PART NO. |
| N.S. | ¾" Vent Breather * | 1 | ABA075 |
| N.S. | 2" x 1-¼" Reducer Bushing (Standard) | 1 | 8020591 |
| N.S. | O-Rings for Sight Gauge | 2 | 0500BBS |
| N.S. | Replacement Filter Element | 2 | TRE-503 |
| N.S. | Standard Filter Flange Gasket | 1 | AFC5074FG |
| N.S. | Filter Flange Cover Bolts | 4 | HCS3816114G5 |
| N.S. | Breather Cap | 1 | BC-50 |
| N.S. | 10-32 Screws w/ O-Ring | 6 | TEK1034 |
| 18<br>19<br>20 | Low Neck Breather Flange<br>Breather Flange Gasket<br>Strainer Basket | 1<br>2<br>1 | AFC330<br>(Sold as assmbly) |
| 21 | 2 x 2 x ¼ Punched Angle **** | 2 | AMA-14MFG-2L |
| 22 | ⅝ -11 UNC x 1-½" Hex Cap Screw **** | 4 | 13309 |
| 23 | 1-¾" x 11/16" x ⅛" Flat Zinc Washer **** | 8 | 33016 |
| 24 | ⅝" Std NC Nylock Nut **** | 4 | 37036 |

* Only available on the 35-gallon tanks. Reference model numbers S035B2AAGFN and S035B2AAGNN.
** Only available with part numbers ending in GNN
*** Only available with part numbers ending in GFN
**** Only available on slim line tanks

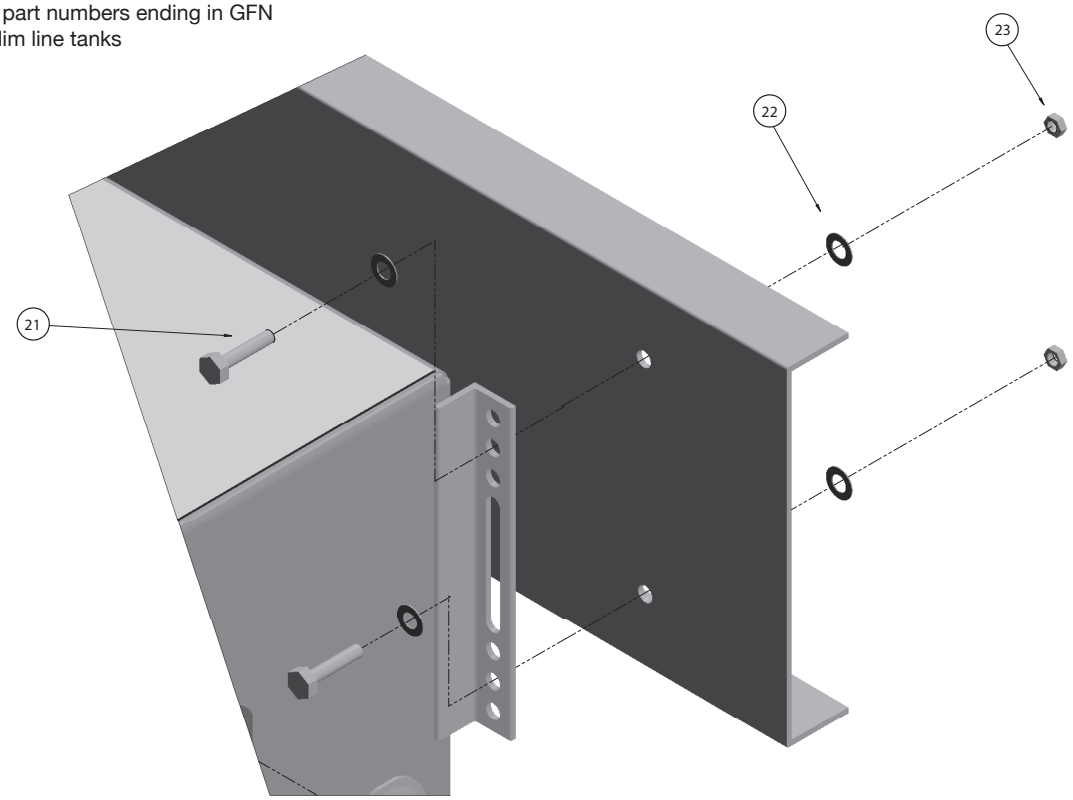


| ITEM | INSTALLATION COMPONENTS ***** | QTY. | PART NO. |
|---|---|---|---|
| 21 | ½" Bolt | 4 | N/A |
| 22 | ½" Flat Washer | 8 | N/A |
| 23 | ½" Hex Nut | 4 | N/A |

***** Installer to provide locknuts, washers, and ½" Grade 5 or better cap srews to attach tank to frame.

# Installation Instructions:

1. Find appropriate area on truck frame rail for desired mounting.

2. Using the bracket dimensions mark locations for holes on the frame. With the 7-gallon tank, you will need to drill appropriate hole locations in the pre-attached mounting brackets on the tank.

3. Drill holes in frame for the ½" bolts.

4. Using the ½" bolts, nuts and washers, mount the tank and brackets to the frame.

5. Install the magnetic drain plug, sensors (if purchased), and vent breather (if purchased). A thread sealant is recommended, however do not use Teflon® tape.

**Note:** Use one of the larger port(s) for the pump supply and one of the smaller port(s) for the return.

### Reference Drawing for Mounting Dimensions

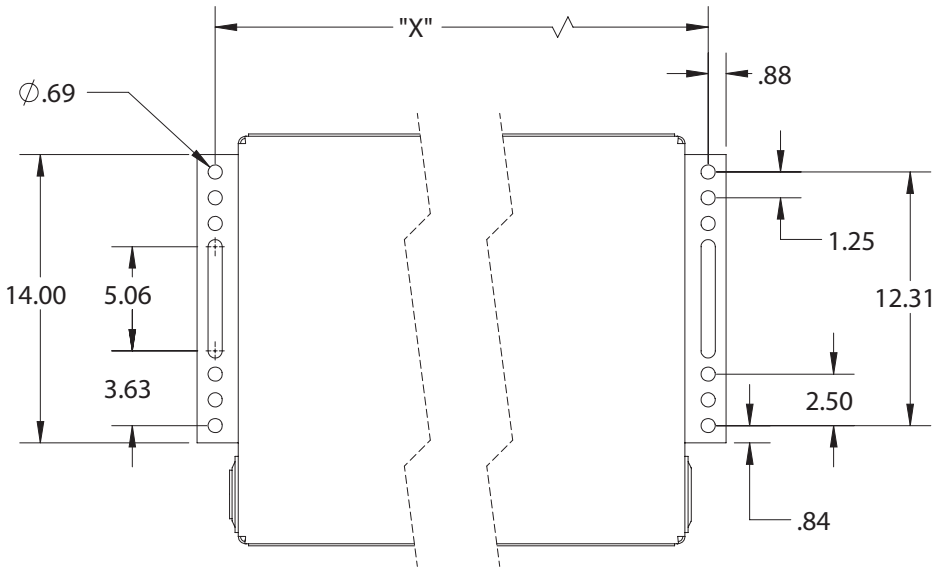


| TANK SIZE | DIMENSION "X" |
|---|---|
| 10 | 14.38" |
| 15 | 18.38" |
| 15 Slim | 13.15" |
| 20 Slim | 13.15" |
| 25 | 22.38" |
| 25 Slim | 13.15" |
| 30 | 26.38" |
| 30 Slim | 13.15" |
| 35 | 20.63" |
| 38 Slim | 21.15" |
| 40 | 34.38" |

Muncie® Power Products
*A Member of the Interpump Group*
201 East Jackson Street • Muncie, Indiana 47305
800-367-7867 • Fax 765-284-6991 • info@munciepower.com • www.munciepower.com
Specifications are subject to change without notice. Visit www.munciepower.com for warranties and literature. All rights reserved. © Muncie Power Products, Inc. (2013)