Muncie®
Power
Products

A20 SERIES

POWER TAKE-OFF

PARTS LIST AND SERVICE MANUAL

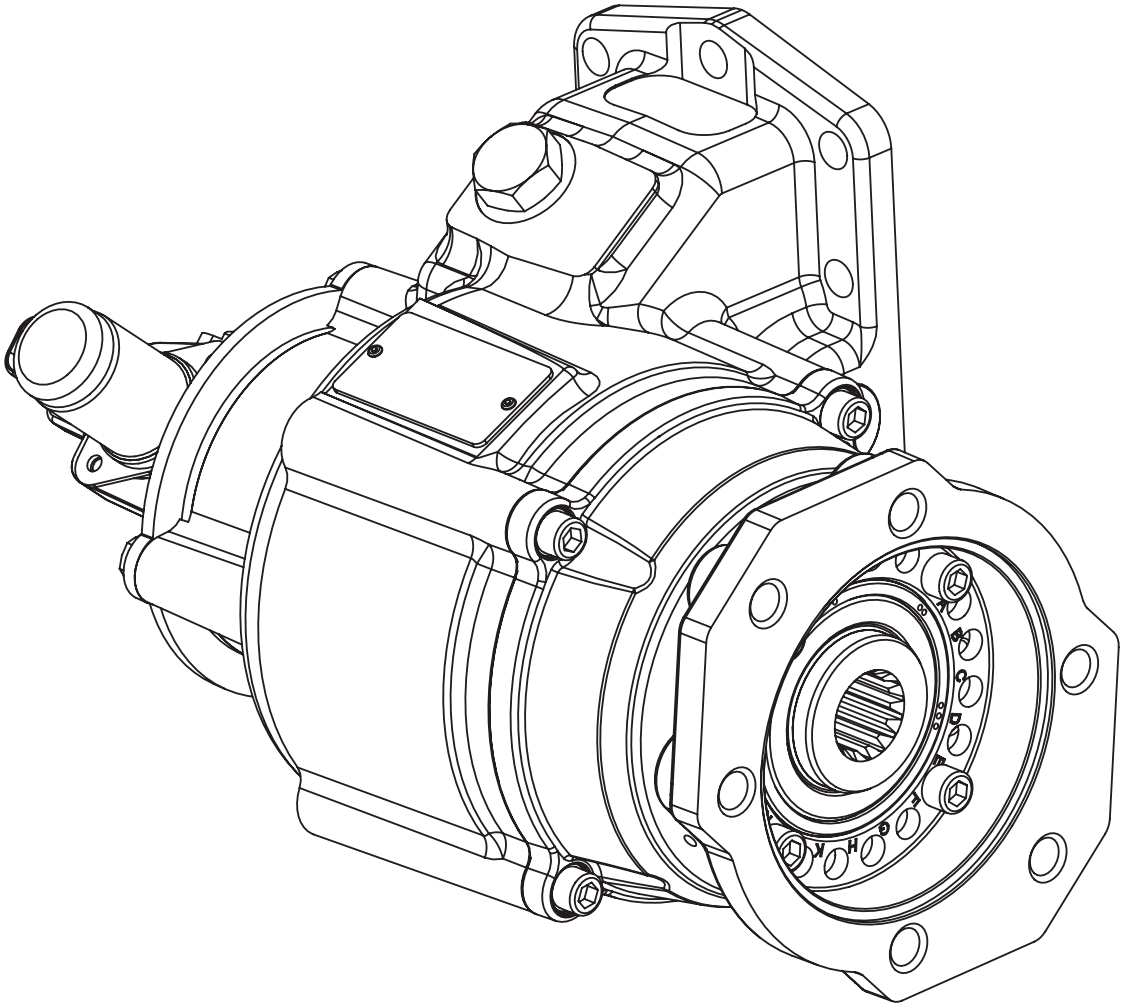

Muncie Power Products, Inc.

Model Number Construction

A20–A10 07–HX 3 BB PX XX

PTO Series
A20 — Medium Duty Clutch Shift 10-Bolt

Transmission Input Gear Option
A10 — Allison 3000/4000 Series

Speed Ratios
05 — .54:1
06 — .63:1
07 — .73:1
08 — .84:1
09 — .90:1
10 — .97:1
11 — 1.10:1
12 — 1.19:1
15 — 1.48:1

Shift Options
HX — 12 V Electric/Hydraulic
HR — 12 V Electric/Hydraulic Remote Mount
JX — 24 V Electric/Hydraulic
JR — 24 V Electric/Hydraulic Remote Mount
XX — Electric/Hydraulic w/o Activation Components
RS — **Muncie Start®** Reduced Harness
RX — 12 V Reduced Harness (Wiring Pigtails Only)
SX — 12 V **Muncie Start®** Integral
SR — 12 V **Muncie Start®** Remote Mount
HH — 12 V Electric/Hydraulic Hino 2015–2020
H2 — 12 V Electric/Hydraulic Hino 2021 & Newer
J2 — 24 V Electric/Hydraulic Hino 2021 & Newer
S2 — 12 V **Muncie Start®** Hino 2021 & Newer

Assembly Arrangements
1 — Right Side Shaft Low
3 — Left Side Shaft Low
5 — No Offset (Straight Out From Opening)

Flange Position Codes**
A1-T3 — Custom Flange Position
XX — Flange Shipped Loose
Blank — Default Position

Special Feature Options
PX — Standard Hose Kit
PW — Wet Spline w/Standard Hose Kit***
BX — Top Opening Hose Kit
BW — Top Opening Hose Kit Wet Spline
US — Pulse Generator & SPD-2000
UX — Pulse Generator & Standard Hose Kit
UB — Pulse Generator &Top Hose Kit
XX — Delete Hose Kit

Output Options
1X — 1¼" Round Keyed Shaft
2I — DIN 5462 Euro
AA — SAE "A" ⅝" -9T, SAE "A" 2-Bolt
BA* — SAE "B" ⅞" -13T, SAE "A" 2-Bolt
BB* — SAE "B" ⅞" -13T, SAE "B" 2- & 4-Bolt
BS* — SAE "B" ⅞" -13T, SAE "B" 2-Bolt
CB* — XSMC Shaft Extension Mount***
CC* — SAE "C" 1¼" -14T, SAE "C" 2- & 4-Bolt
II — DIN 5462
PB* — SAE "BB" 1" -15T SAE "B" 2- & 4-Bolt
PS* — SAE "BB" 1" -15T SAE "B" 2-Bolt
TA — ¾" -11T, SAE "A" 2-Bolt
X2 — 1½" -10T, DIN Companion Flange
X4 — 1½" -10T Male, 1410 Companion Flange
XX — 1½" -10T Male, For Companion Flange
ZB — SAE "C" 1¼" -14T, SAE "B" 2- & 4-Bolt

Notes:
* Wet Spline Option Available
** Special Flange Arrangement Example: A1 or T3: for proper code selection adjust flange to the ideal position and note the letter that aligns centered with the marked dots.
*** Use with Shaft Extension

OTHER A20 LITERATURE	
IN17-04	All PTO Operator's Manual
IN21-01	A20-A30 10-Bolt PTO Installation ES
IN21-02	A20 10-Bolt Clutch Shift Activation ES
IN21-03	A20 10-Bolt PTO Activation Hino 2020-older Allison 2000 ES
IN21-04	A20 10-Bolt Muncie Start® PTO Activation ES
IN21-06	A20 Rebuild Instructions
IN21-07	A20 10-Bolt Activation Hino 2021 newer Allison 3000 ES
IN21-08	A20 A30 MC1 Shaft Installation Brackets ES

A20 Flange Code Identification

The A20 PTO has a new 30 position, rotatable, output flange. In addition to Muncie Power's standard default flange positions, the flange may be ordered in a custom position to accommodate virtually any required pump orientation. These positions can be identified by a code that is shown on the output flange and PTO cover.

To identify what code is necessary, line up the letter on the flange with a set of dots on the PTO cover. The letter will be centered over the dots. the code will be a letter, followed by the number of dots. This code can then be added to the end of the A20 model code for future orders, and the PTO will ship with the flange in the same position. See the examples shown in Figures 1-3 for details. The flange may also be shipped loose by adding an XX to the end of the A20 PTO model code.

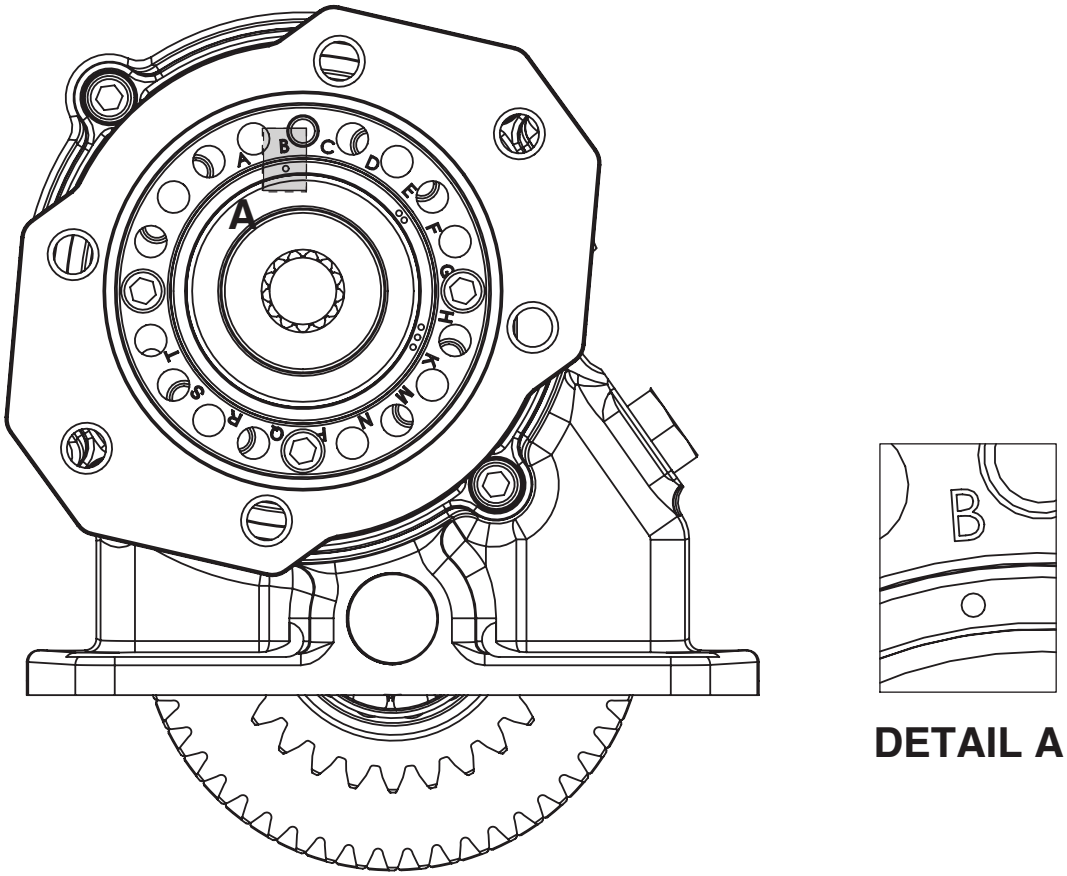

Figure 1: A20 Flange Orientation – A20-A10**-***-BB**-B1

A20 Flange Code Identification continued

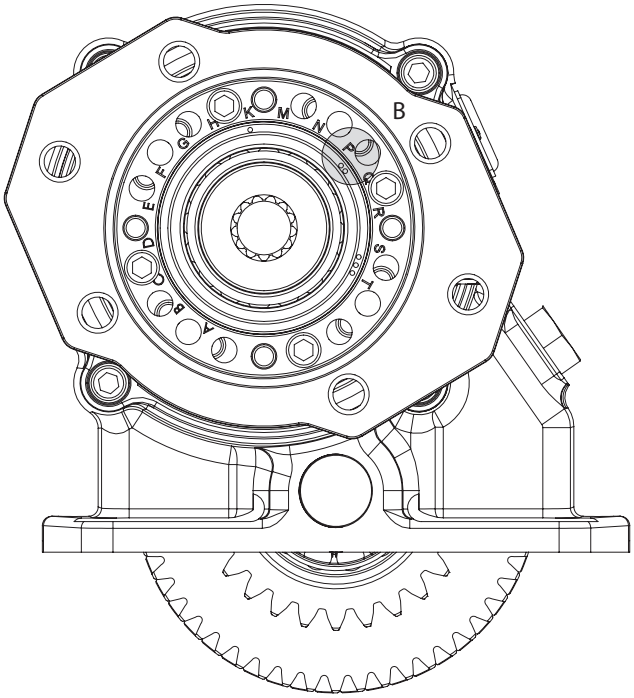

DETAIL B

Figure 2: A20 Flange Orientation – A20-A10**-***-BB**-P2

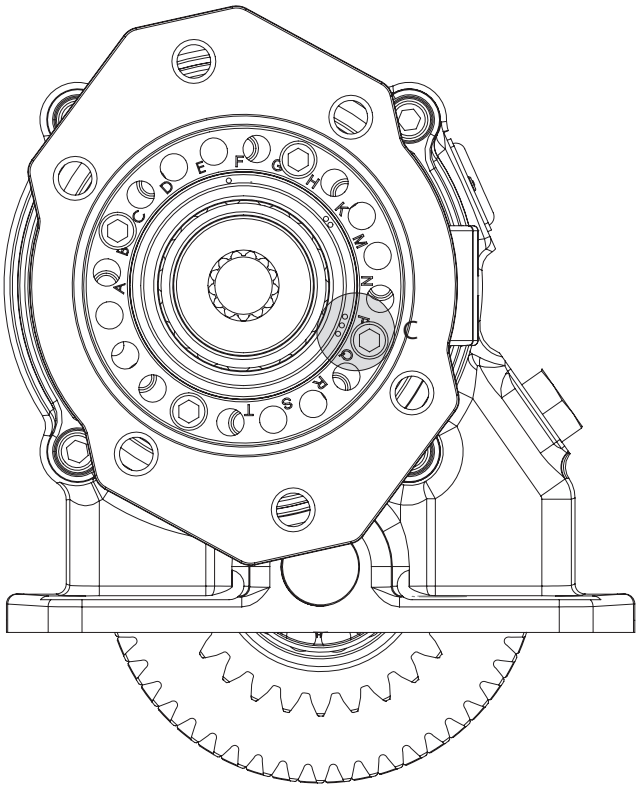

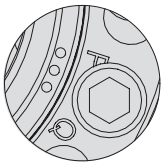

DETAIL C

Figure 3: A20 Flange Orientation – A20-A10**-***-BB**-P3

A20/A30 Flange Configurations

LETTER	1	2	3
A	X		
B	X		
C	X		
D	X	X	
E	X	X	
F	X	X	
G	X	X	X
H	X	X	X
K	X	X	X
M	X	X	X
N		X	X
P		X	X
Q		X	X
R			X
S			X
T			X

X = Current valid A20/A30 flange positions

A20 Exploded View

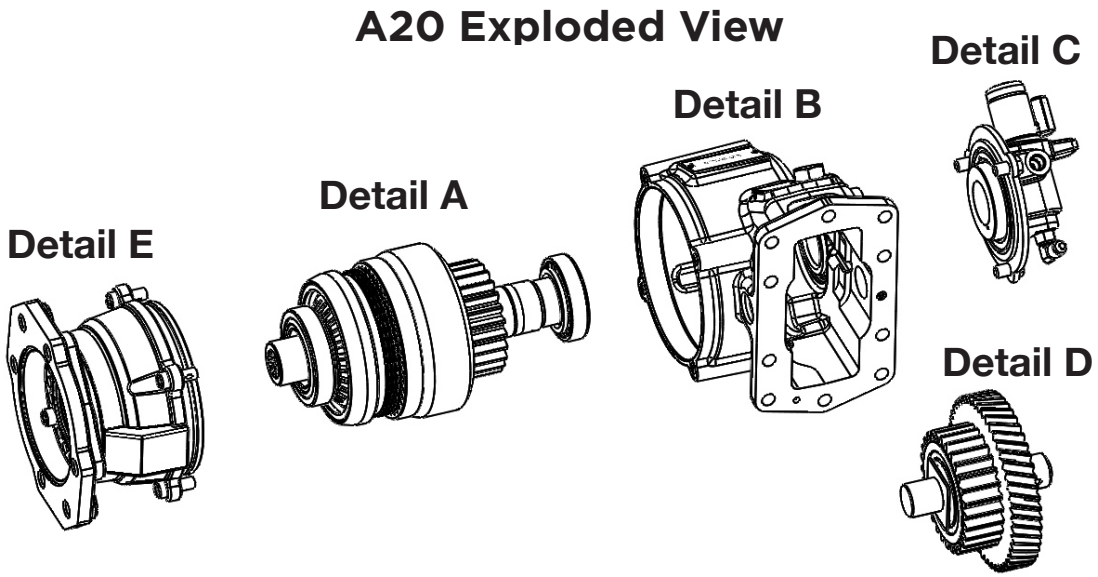

Detail A - Output Shaft Assembly

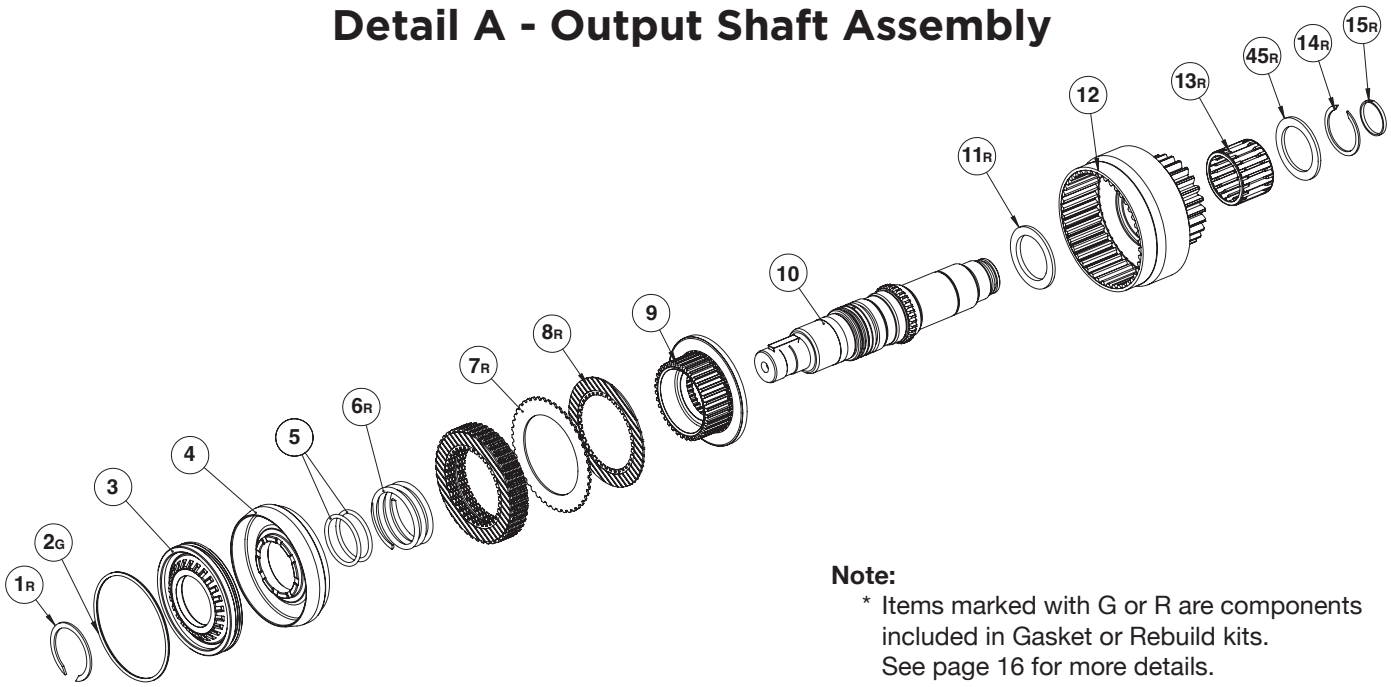

Note:

* Items marked with G or R are components included in Gasket or Rebuild kits. See page 16 for more details.

ITEM	QTY.	PART NO.	DESCRIPTION
1	1	12T43296	Snap Ring
2	1	12T36472	O-Ring
3	1	49T43114	Piston (requires 27T64362 wiggle wire in orifice)
4	1	49T43298	Piston Cup
5	2	12T36869	O-Ring
6	1	27T36112	Piston Return Spring
7	7	49T40641	Spacer Disc
8	8	49T33564	Friction Disc
9	1	02T43059	Clutch Hub
10	1	06T43103	Comp Flange Shaft
		06T43104	SAE B ⅞" -13T Shaft
		06T43105	"CB" Output Shaft
		06T43106	DIN 5462 -8T Shaft
		06T43107	SAE BB 1.0" -15T Shaft
		06T43108	1¼" RD w/5⁄16" Key
		06T65319	"ZB" Output Shaft

ITEM	QTY.	PART NO.	DESCRIPTION
11	1	21T63014	Stepped Thrust Washer
12	1	02TA6070	Output Gear 05 Ratio 37T
		02TA6069	Output Gear 06 Ratio 35T
		02TA6068	Output Gear 07 Ratio 33T
		02TA6067	Output Gear 08 Ratio 31T
		02TA6066	Output Gear 09 Ratio 30T
		02TA6065	Output Gear 10 Ratio 29T
		02TA6064	Output Gear 11 Ratio 28T
		02TA6063	Output Gear 12 Ratio 26T
		02TA6060	Output Gear 15 Ratio 23T
13	1	10T43603	Needle Bearing
14	1	12T43295	Snap Ring
15	1	12T42978	Shaft Seal
45	1	21T43294	Thrust Washer

Detail B - Housing Assembly

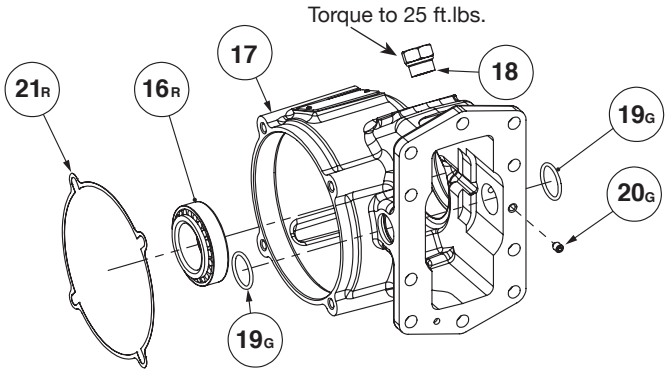

Shaft end play must be set between 0.001" - 0.005"

ITEM	QTY.	PART NO.	DESCRIPTION
16	1	10T43098	Tapered Roller Bearing
17	1	01T43462	Housing – 1 Arrangement
		01T43433	Housing – 3 Arrangement
		01T43513	Housing – 5 Arrangement
18	1	25T35999	Plug
19	2	12T39023	O-Ring
20	1	19T36082	Set Screw
21	1	18TK6341 (Shim Kit includes listed shims)	Shim; .003" (Green)
			Shim; .005" (Blue)
			Shim; .010" (Brown)
			Shim; .015" (Pink)
			Shim; .020" (Yellow)
			Shim; .025" (White)
			Shim; .030" (Orange)

Detail C - Rear Cover Assembly

Integral Solenoid Rear Cover

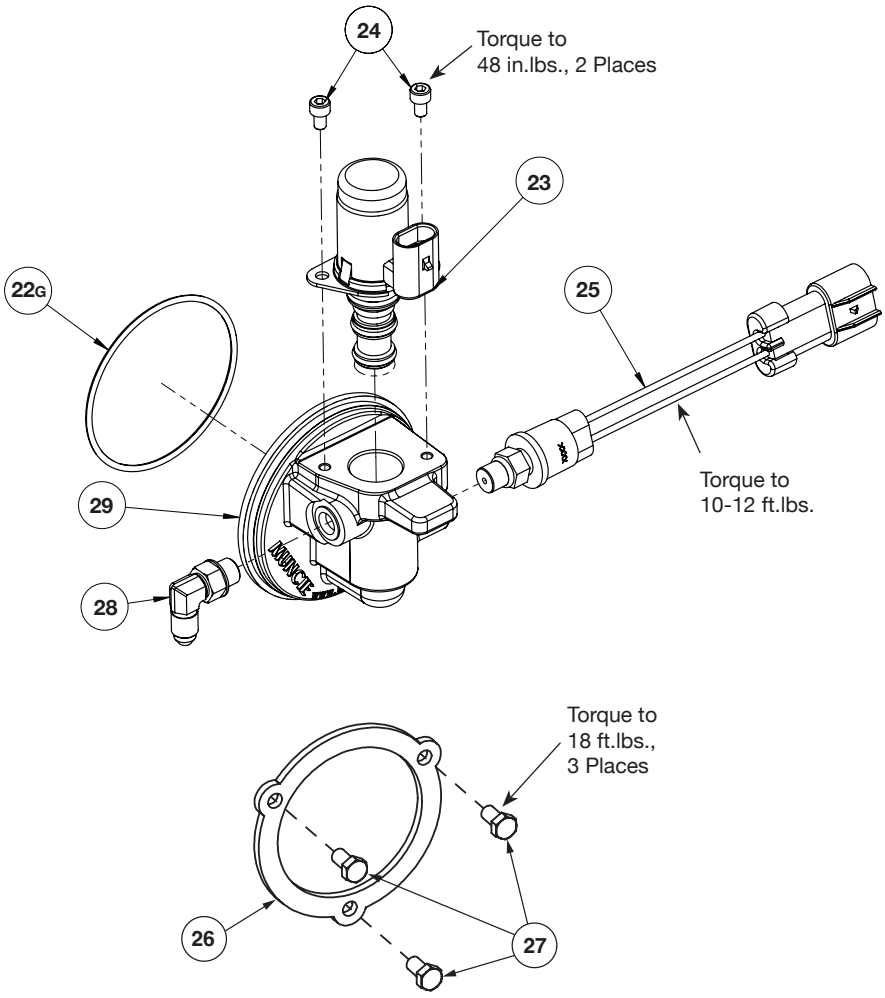

Remote Mount Solenoid Cover

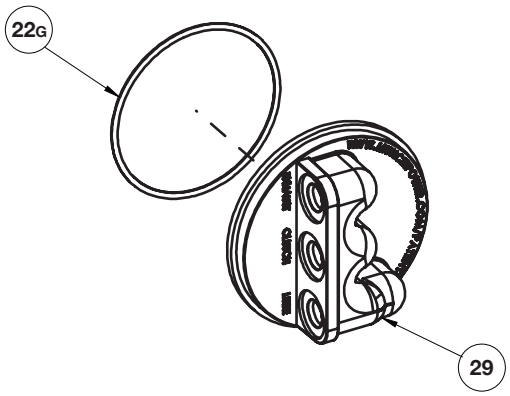

Detail C - Rear Cover Assembly continued

Muncie Start Rear Cover

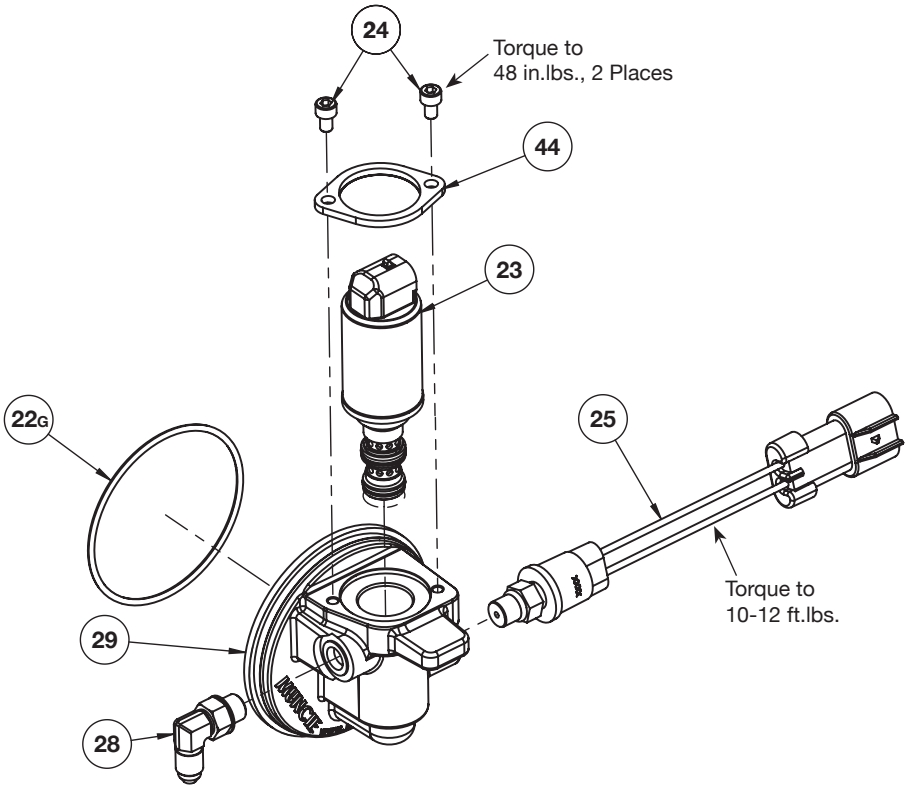

Note: Muncie Start Units

ITEM	QTY.	PART NO.	DESCRIPTION
22	1	12T36701	O-Ring
23	1	35T40860	12 V Solenoid Valve – Std.
		35T40864	24 V Solenoid Valve
		35T43601	24 V Solenoid Valve – Std.
		35T62496	12 V Solenoid – Muncie Start®
24	2	19T62950	Solenoid Cap Screw
25	1	30T60223	Pressure Switch
26	1	49T43434	Valve Body Lock Ring
27	3	19T33233	Cap Screw
28	1	43M68014	Elbow Fitting
29		15T62444	Integral Solenoid Muncie Start Cover
		15T61745	Remote Mount Solenoid Cover
		15T61093	Integral Solenoid Rear Cover
44	1	49T62436	Clamp Ring

Detail D - Input Gear Assembly

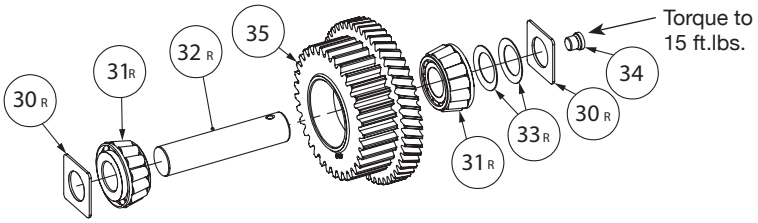

ITEM	QTY.	PART NO.	DESCRIPTION
30	2	18T42642	Square Washer
31	2	10T43096	Input Bearing (07-15 Ratios)
		10T43287	Input Bearing (05/06 Ratios)
32	1	07T43110	Idler Shaft
33	2	27T43291	Belleville Washer
34	1	25T41463	Plug

ITEM	QTY.	PART NO.	DESCRIPTION
35	1	03T43085	Input Gear 05 Ratio 20T/50T
		03T43084	Input Gear 06 Ratio 22T/50T
		03T43083	Input Gear 07 Ratio 24T/50T
		03T43082	Input Gear 08 Ratio 26T/50T
		03T43081	Input Gear 09 Ratio 27T/50T
		03T43080	Input Gear 10 Ratio 28T/50T
		03T43086	Input Gear 11 Ratio 31T/50T
		03T43087	Input Gear 12 Ratio 31T/50T
		03T43077	Input Gear 15 Ratio 34T/50T

Detail E - Output Cover Assembly

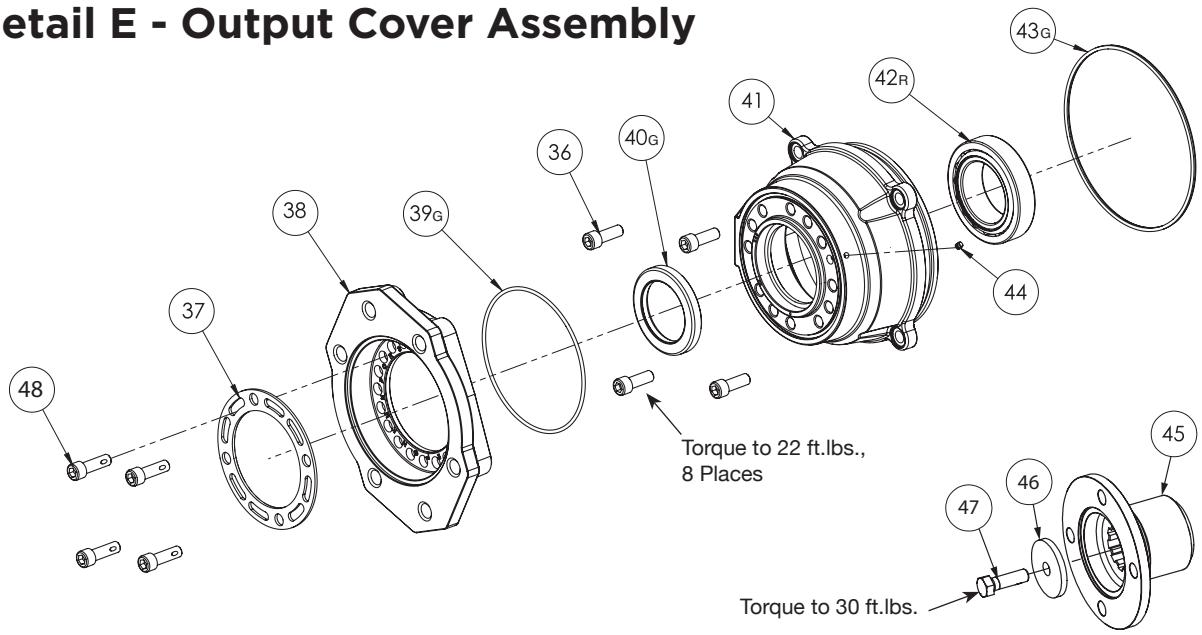

ITEM	QTY.	PART NO.	DESCRIPTION
36	4	19T36588	Cap Screw
37	1	58T65794	Flange Mounting Ring
38	1	14T65388	SAE “B” 2- & 4-Bolt Output Flange
		14T65653	SAE “A” 2-Bolt Output Flange
		14T65650	SAE “B” 2-Bolt Output Flange
		14T65449	SAE “C” 2- & 4-Bolt Output Flange
		14T65918	“II” Output Flange, DIN 5462
39	1	12T43185	O-Ring
40	1	11T38247	Shaft Seal*
	1	11T64141	Shaft Seal (Used on “1X”. “X2” & “X4” Outputs)

ITEM	QTY.	PART NO.	DESCRIPTION
41	1	15T65391	Direct Mount Pump Cover
		15TA6365	Companion Flange & Keyed Shaft Cover**
42	1	10T43097	Bearing
43	1	12T34003	O-Ring
44	1	25T41375	Weep Hole Plug***
45	1	14T31499	1410 Companion Flange (Muncie “4”)
		14T37498	DIN 100 Companion Flange (Muncie “2”)
46	1	21T20092	Flat Washer
47	1	19T38266	Cap Screw
48	4	19M84478	Cap Screw (DIN Outputs)
	4	19T36588	Cap Screw (SAE Outputs)

Notes:

* Shaft seal not used on wet spline applications.
** Includes shaft seal and cone break.
*** Used on wet spline applications.

A20 Installation Kits

Activation Plumbing Components Included in All Installation Kits

Integral Solenoid Installation Kit (Non Muncie-Start® Units)

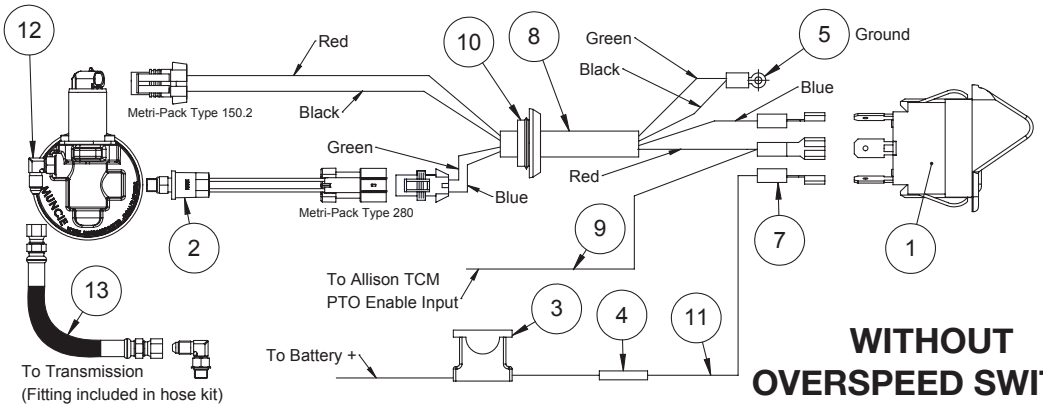

WITHOUT OVERSPEED SWITCH

ITEM	PART NO.	DESCRIPTION	QUANTITY IN KIT			
			48TK6583 (HX***PX)	48TK6584 (JX***PX)	48TK6585 (HX***BX)	48TK6586 (JX***BX)
1	30T43806	12 V Switch Kit	1	-	1	-
	30T36453	24 V Switch Kit	-	1	-	1
2	30T60223	Pressure Switch	1	1	1	1
3	33T36299	10 Amp Fuse & Holder	1	1	1	1
4	34M18002	Butt Splice	1	1	1	1
5	34M18009	Ring Terminal	2	2	2	2
6	34M18187	3/16" Female Spade Terminal	2	2	2	2
7	34M18250	Female Spade Terminal	3	3	3	3
8	34T40902	Wire Harness	1	1	1	1
9	34T43180	Allison Input Cable	1	1	1	1
10	37T35674	Grommet	1	1	1	1
11	37T42506	6' Wire	1	1	1	1
12	43M68014	Lube Fitting	1	1	1	1
13	43TK3881	28" Hose Kit	1	1	-	-
	43TK3885	57" Hose Kit	-	-	1	1
N.S.	43T43712	Elbow	1	1	1	1
N.S.	20TK6353	Stud Kit	1	1	1	1
N.S.	13T35777	Allison 10-Bolt Gasket	1	1	1	1
N.S.	36MK3841	Safety Labels	1	1	1	1

WITH OVERSPEED SWITCH

Overspeed Option – Faceplate with light access and overspeed light are not included in 30T43806 (12 V bracket assembly) and are to be ordered separately in kit 36TK4971. They are included in the 24 V kit (48TK6584, 48TK6586).

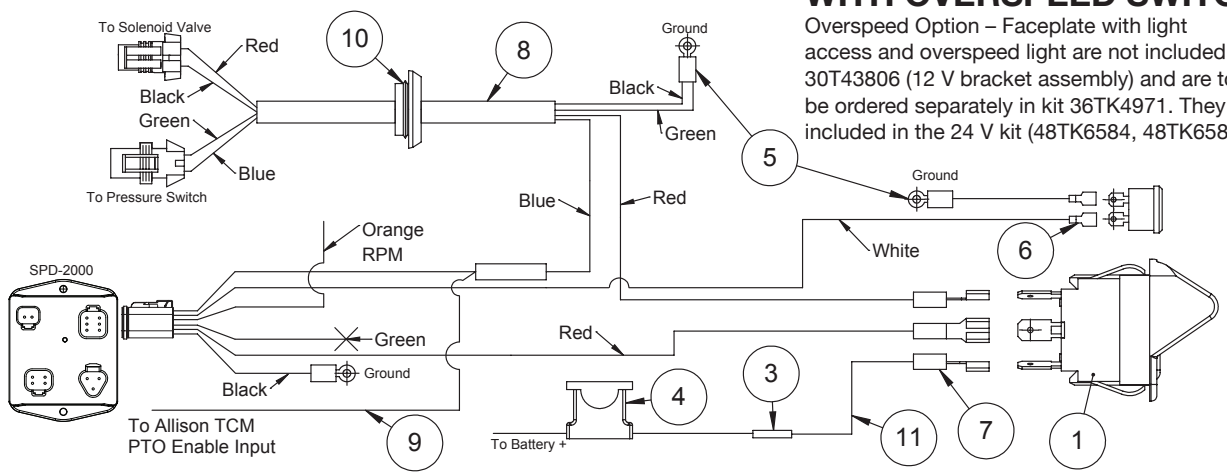

A20 Installation Kits

Activation Plumbing Components Included in All Installation Kits

Remote Solenoid Activation Kit (Non Muncie-Start® Units)

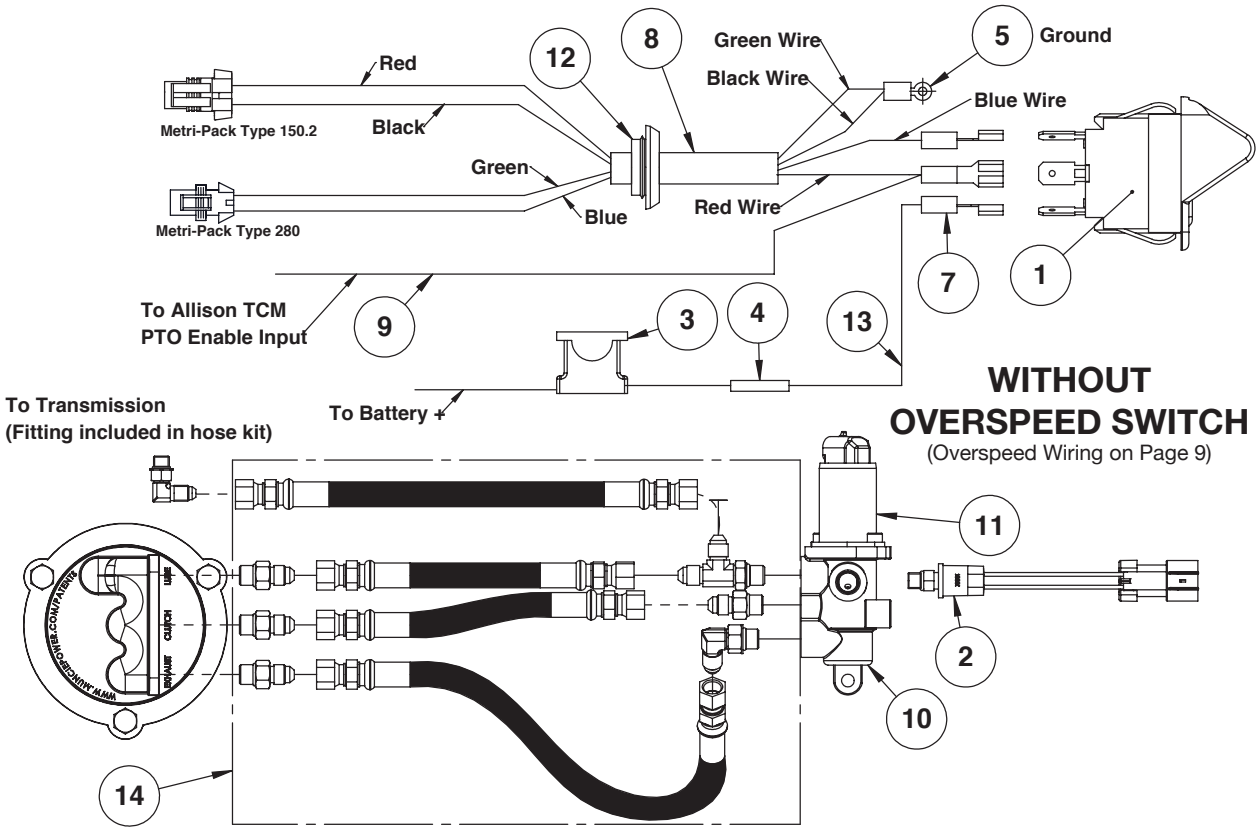

ITEM	PART NO.	DESCRIPTION	QUANTITY IN KIT	
			48TK6588 (HR***PX)	48TK6589 (JR***PX)
1	30T43806	12 V Switch Kit	1	-
	30T36453	24 V Switch Kit	-	1
2	30T60223	Pressure Switch	1	1
3	33T36299	10 Amp Fuse & Holder	1	1
4	34M18002	Butt Splice	1	1
5	34M18009	Ring Terminal	1	1
6	34M18187	3/16" Female Spade Terminal	2	2
7	34M18250	Female Spade Terminal	1	3
8	34T40902	Wire Harness	1	1
9	34T43180	Allison Input Cable	1	1
10	35T62632	Valve Body	1	1
11	35T43600	12 V Solenoid Valve	1	-
	35T43601	24 V Solenoid Valve	-	1
N.S.	19T62950	Solenoid Cap Screw	2	2
N.S.	49T62436	Solenoid Clamp Ring	1	1
12	37T35674	Grommet	1	1
13	37T42506	6' Wire	1	1
14	43TK6295	Hose Kit	1	1
N.S.	43T43712	Elbow	1	1
N.S.	19T36632	Cap Screw	2	2
N.S.	21T37991	Lock Washer	2	2
N.S.	22T35140	Hex Nut	2	2
N.S.	20TK6566	Stud Kit	1	1
N.S.	13T35777	Allison 10-Bolt Gasket	1	1
N.S.	36MK3841	Safety Labels	1	1

A20 Installation Kits

Activation Plumbing Components Included in All Installation Kits

Integral Solenoid Installation Kit (Muncie-Start® Units)

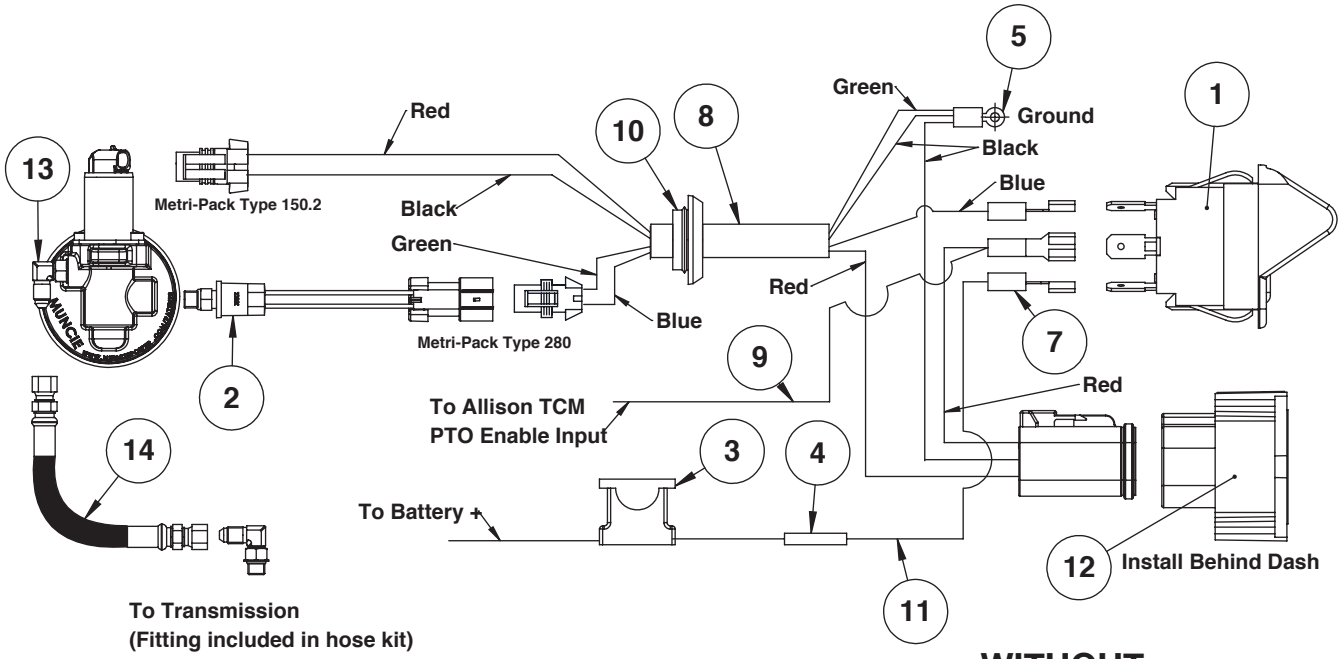

WITHOUT OVERSPEED SWITCH

(Overspeed Wiring on Page 9)

ITEM	PART NO.	DESCRIPTION	QUANTITY IN KIT	
			48TK6590 (SX***PX)	48TK6591 (SX***BX)
1	30T43806	12 V Switch Kit	1	1
2	30T60223	Pressure Switch	1	1
3	33T36299	10 Amp Fuse & Holder	1	1
4	34M18002	Butt Splice	1	1
5	34M18009	Ring Terminal	2	2
6	34M18187	3/16" Female Spade Terminal	2	2
7	34M18250	Female Spade Terminal	3	3
8	34T43833	Wire Harness	1	1
9	34T43180	Allison Input Cable	1	1
10	37T35674	Grommet	1	1
11	37T42506	6' Wire	1	-
12	38T63052	12 V Muncie-Start® Module	1	1
13	43M68014	Lube Fitting	1	1
14	43TK3881	28" Hose Kit	1	-
	43TK3885	57" Hose Kit	-	1
N.S.	43T43712	Elbow	1	1
N.S.	20TK6566	Stud Kit	1	1
N.S.	36MK3841	Safety Labels	1	1
N.S.	13T35777	Allison 10-Bolt Gasket	1	1

A20 Installation Kits

Activation Plumbing Components Included in All Installation Kits

Remote Solenoid Activation Kit (Muncie-Start® Units)

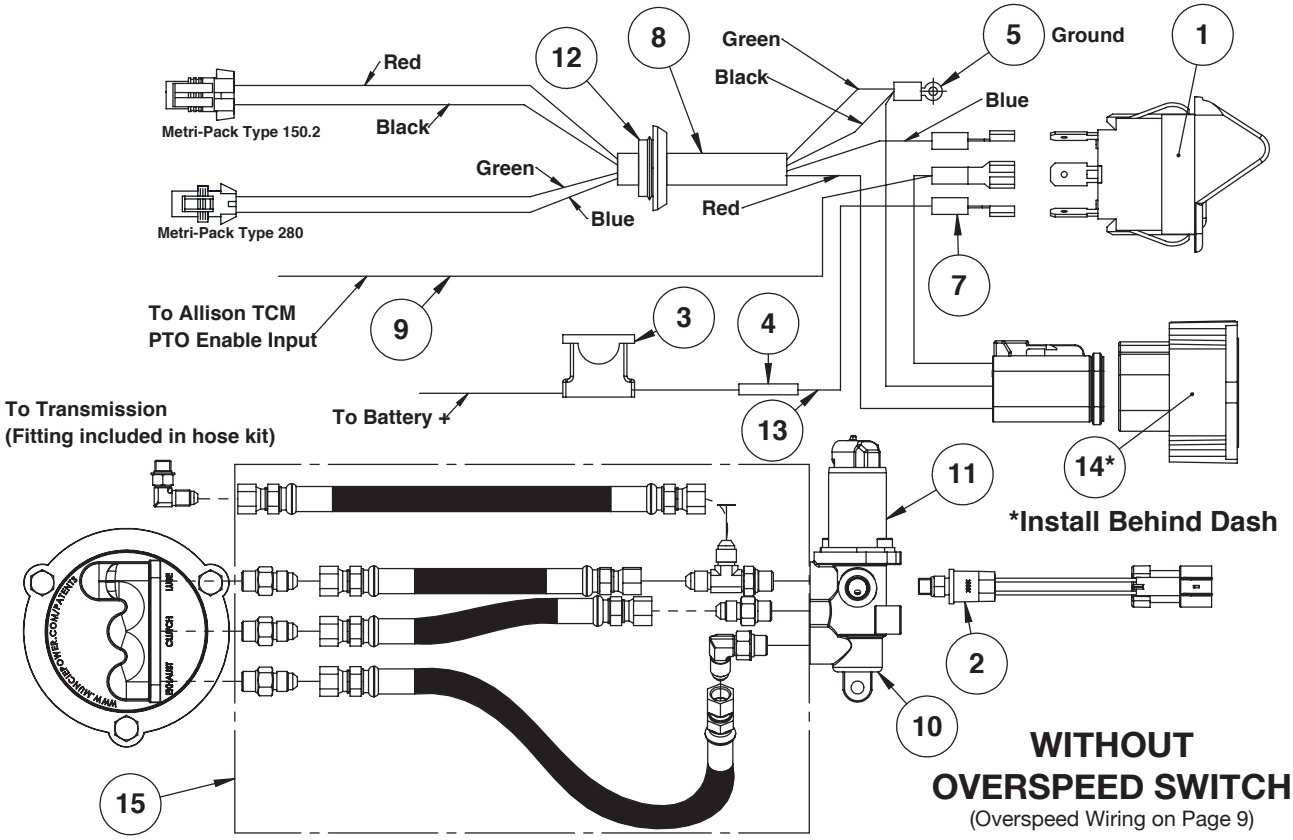

ITEM	PART NO.	DESCRIPTION	QUANTITY IN KIT
			48TK6592 (SR***PX)
1	30T43806	12 V Switch Kit	1
2	30T60223	Pressure Switch	1
3	33T36299	10 Amp Fuse & Holder	1
4	34M18002	Butt Splice	1
5	34M18009	Ring Terminal	1
6	34M18187	3/16" Female Spade Terminal	2
7	34M18250	Female Spade Terminal	1
8	34T43833	Wire Harness	1
9	34T43180	Allison Input Cable	1
10	35T62717	Valve Body	1
11	35T62496	12 V Solenoid Valve	1
N.S.	19T62950	Solenoid Cap Screw	2
N.S.	49T62436	Solenoid Clamp Ring	1
12	37T35674	Grommet	1
13	37T42506	6' Wire	1
14	38T63052	12 V Muncie-Start® Module	1
15	43TK6295	Hose Kit	1
N.S.	43T43712	Elbow	1
N.S.	19T36623	Cap Screw	2
N.S.	21T37991	Cap Screw	2
N.S.	22T35140	Hex Nut	2
N.S.	20TK6566	Stud Kit	1
N.S.	13T35777	Allison 10-Bolt Gasket	1
N.S.	36MK3841	Safety Labels	1

A20 Installation Kits

Activation Plumbing Components Included in All Installation Kits

Integral Solenoid Installation Kit for Hino Chassis (Non Muncie-Start® Units)

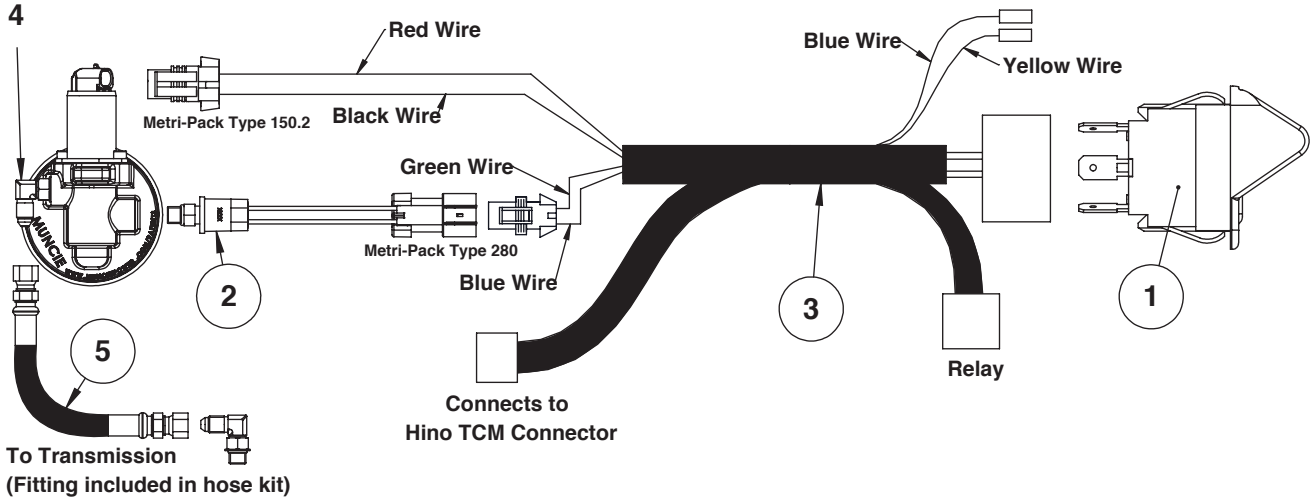

ITEM	PART NO.	DESCRIPTION	QUANTITY IN KIT					
			48TK6314 (HH***PX)	48TK6340 (JH***PX)	48TK6599 (HM***PX)	48TK6600 (H2***PX)	48TK6601 (J2***PX)	48TK6602 (S2***PX)
1	30T35687	12 V Rocker Switch	1	-	1	1	-	1
	30T36435	24 V Rocker Switch	-	1	-	-	1	-
2	30T60223	Pressure Switch	1	1	1	1	1	1
3	34T43651	Hino Wire Harness	1	1	1	-	-	-
	34T42528	Soft Start Harness	-	-	1	-	-	1
	34T44002	2021 Hino Allison Harness	-	-	-	1	1	1
4	43M68014	Lube Fitting	1	1	1	1	1	1
5	43TK3881	28" Hose Kit	1	1	1	1	1	1
N.S.	43T43712	Elbow	1	1	1	1	1	1
N.S.	20TK6566	Stud Kit	1	1	1	1	1	1
N.S.	13T35777	Allison 10-Bolt Gasket	1	1	1	1	1	1
N.S.	36MK3841	Safety Labels	1	1	1	1	1	1

Integral Solenoid Installation Kit – No Activation Components

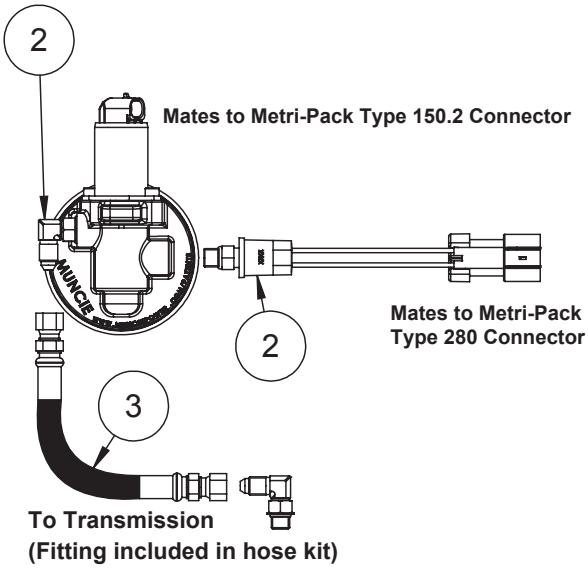

ITEM	PART NO.	DESCRIPTION	QUANTITY IN KIT		
			48TK6194 (XX***PX)	48TK6612 (RX***PX)	48TK6659 (RS***PX)
1	30T60223	Pressure Switch	1	1	1
2	43M68014	Lube Fitting	1	1	1
3	43TK3881	28" Hose Kit	1	1	1
N.S.	43T43712	Elbow	1	1	1
N.S.	20TK6566	Stud Kit	1	1	1
N.S.	52MK1010	Allison 10-Bolt Gasket Kit	1	1	1
N.S.	36MK3841	Safety Labels	1	1	1
N.S.	34T42527	Wiring Pigtails	–	1	1
N.S.	38T63052	Muncie Start® Module	–	–	1

20TK6566 – Stud Kit

PART NO.	QTY.	DESCRIPTION
MC21-02	1	Instruction
19T64314	8	Cap Screw
20T63321	2	Alignment Stud
21T64303	8	Flat Washers

30T43806 – 12 V Switch Kit

Item	PART NO.	QTY.	DESCRIPTION
1	30T35687	1	Rocker Switch
2	36T42362	1	Bracket
3	36T42380	1	Face Plate for Switch
N.S.	36MK5660	1	Bolt Kit

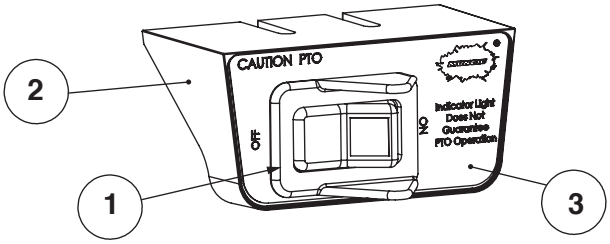

30T36453 – 24 V Switch Kit

Item	PART NO.	QTY.	DESCRIPTION
1	30T35712	1	24 V Switch
2	36MA1005	1	Dash Bracket
3	36T36271	1	Face Plate
N.S.	36M01006	1	Face Plate
N.S.	34M16250	1	Female Spade Terminal
N.S.	36MK1007	1	Bolt Kit
N.S.	32MSR24V	1	24 V Red Light

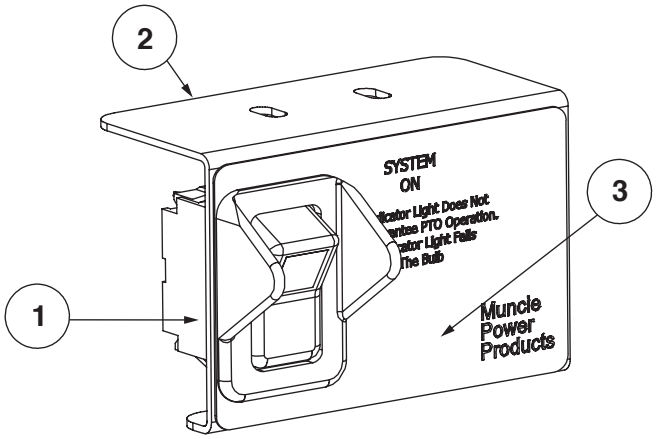

Speed Sensor Kit – Option "U"

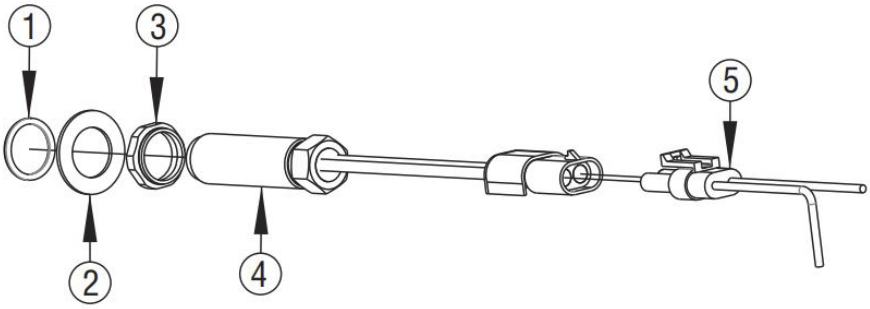

Speed Sensor Kit – 31TK3873

Item	PART NO.	QTY.	DESCRIPTION
1	21T41900	1	Seal Washer
2	21T35603	1	Flat Washer
3	21T35109	1	Jam Nut
4	31T35108	1	Mag Pickup
5	34MA1415	1	Wiring Harness

43TK3881 – 28" Hose Kit

Item	PART NO.	QTY.	DESCRIPTION
1	45T36274	1	28" Hose Assembly
2	43M68014	1	Lube Fitting
3	43T36445	1	Elbow Fitting

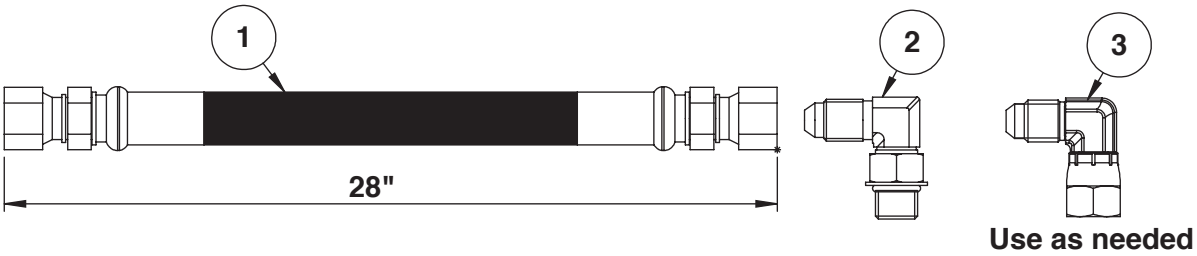

43TK3885 – 57" Hose Kit

Item	PART NO.	QTY.	DESCRIPTION
1	45T36273	1	57" Hose Assembly
2	43M68014	1	Lube Fitting

43TK6295 – Remote Solenoid Hose Kit

Item	PART NO.	QTY.	DESCRIPTION
1	45T36274	4	28" Hose Assembly
2	43T36431	5	Straight Adapter
3	43M68014	2	Lube Fitting
4	43T43628	1	Run Tee
5	43T36445	2	Elbow Fitting

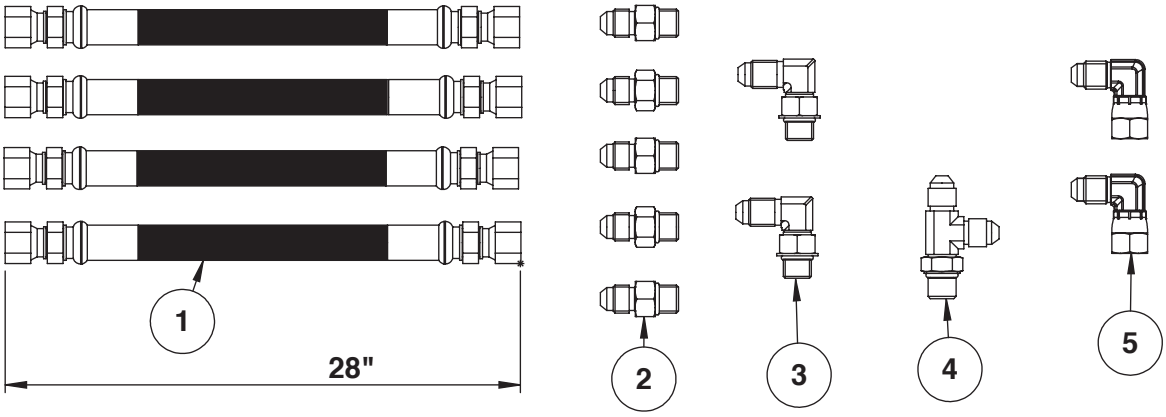

A20-GSK – A20 Gasket Kit

(Gasket Kit items are marked with a “G” in detail views)

Item	PART NO.	QUANTITY IN KIT	DESCRIPTION
2	12T36472	1	O-Ring
5	12T36869	2	O-Ring
15	12T42978	1	Ring Seal
19	12T39023	2	O-Ring
22	12T36701	1	O-Ring
41	11T38247	1	Shaft Seal (Small)
	11T64141	1	Shaft Seal (Large)
37	12T34003	1	O-Ring
40	12T43185	1	O-Ring
N.S.	13T35777	1	Allison 10-Bolt Gasket

A20-RBK-07A – A20 Rebuild Kit For 07 -15 Ratio A20 PTOs

(Rebuild Kit items are marked with a “R” in detail views)

Item	PART NO.	QTY.	DESCRIPTION
1	12T43296	1	Snap Ring
6	27T36112	1	Spring
7	49T33564	8	Spacer Disc
8	49T40641	7	Friction Disc
11	21T43294	1	Stepped Thrust Washer
45	21T63014	1	Thrust Washer
13	10T43603	1	Needle Bearing
14	12T43295	1	Snap Ring
16	10T43098	1	Tapered Bearing
21	18TK6341	1	Shim Kit
30	18T42642	2	Square Washer
31	10T43096	2	Input Bearing
33	27T43291	2	Belleville Washer
38	10T43097	1	Output Bearing
-	A20-GSK	1	A20 Gasket Kit

A20-RBK-05A – A20 Rebuild Kit For 05 & 06 Ratio A20 PTOs

(Rebuild Kit items are marked with a “R” in detail views)

Item	PART NO.	QTY.	DESCRIPTION
1	12T43296	1	Snap Ring
6	27T36112	1	Spring
7	49T33564	8	Spacer Disc
8	49T40641	7	Friction Disc
11	21T43294	1	Stepped Thrust Washer
45	21T63014	1	Thrust Washer
13	10T43603	1	Needle Bearing
14	12T43295	1	Snap Ring
16	10T43098	1	Tapered Bearing
21	18TK6341	1	Shim Kit
30	18T42642	2	Square Washer
31	10T43287	2	Input Bearing
33	27T43291	2	Belleville Washer
38	10T43097	1	Output Bearing
-	A20-GSK	1	A20 Gasket Kit

Wet Spline Pump Mounting Gasket Kit – 12TK6632

PART NO.	QTY.	DESCRIPTION
12T34003	1	SAE C Pump O-Ring
12T43185	1	SAE B Pump O-Ring
11220082P00	1	DIN 5462 Gasket

EX Drive Mounting Gasket Kit – 13TK6635

Dimensions

3 Arrangement

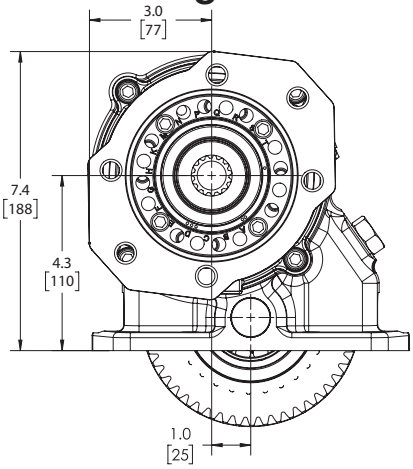

5 Arrangement

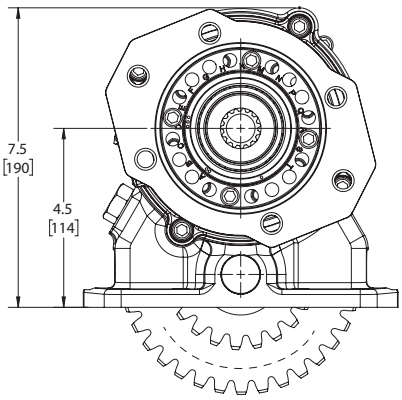

1 Arrangement

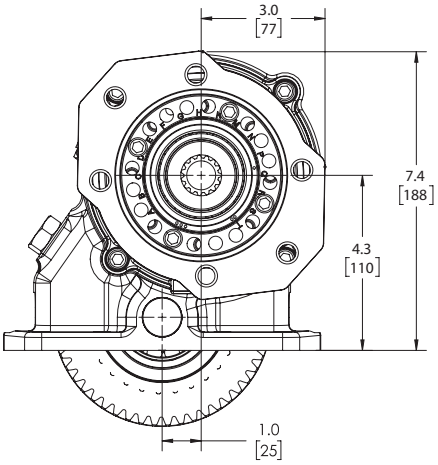

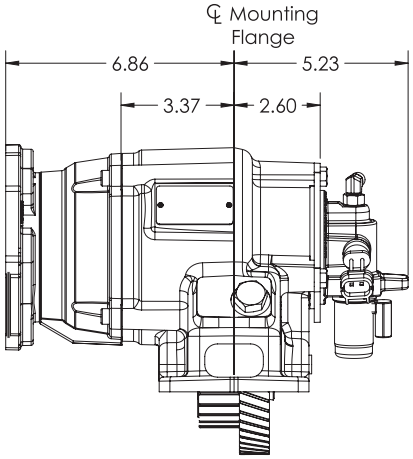

A20 w/Integral Solenoid

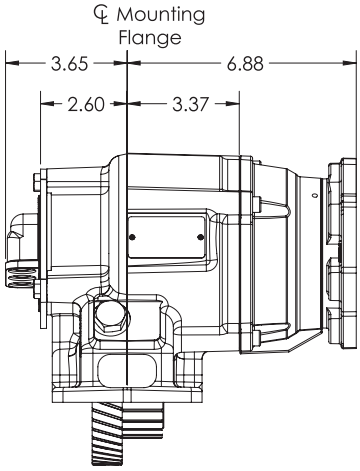

A20 w/Remote Solenoid

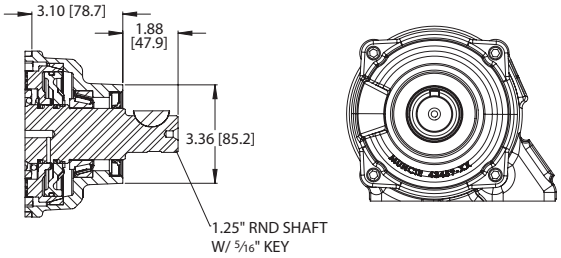

"1X" OUTPUT – 1¼" Round Keyed Shaft

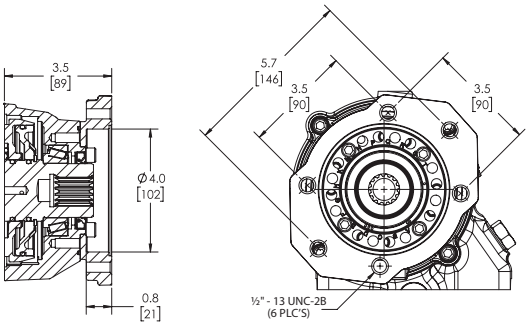

"BB" OUTPUT – SAE "B" ⅞"-13T, SAE "B" 2- & 4-Bolt
"CB" OUTPUT – Special Shaft Extension Flange
"PB" OUTPUT – SAE "BB" 1"-15T, SAE "B" 2- & 4-Bolt
"ZB" OUTPUT – SAE "C" 1¼"-14T, SAE "B" 2- & 4-Bolt

Dimensions continued

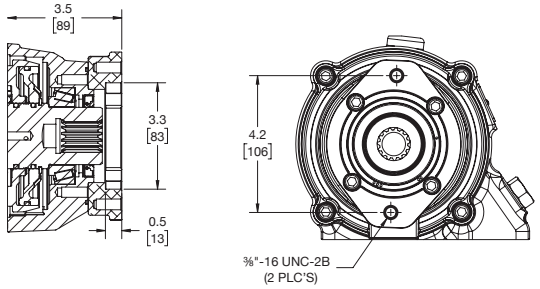

"AA" OUTPUT – SAE "A" ⅝"-9T Shaft, SAE-"A" 2-Bolt
"BA" OUTPUT – SAE "B" ⅞"-13T, SAE-"A" 2-Bolt Flange
"TA" OUTPUT – SAE ¾"-11T, SAE "A" 2-Bolt

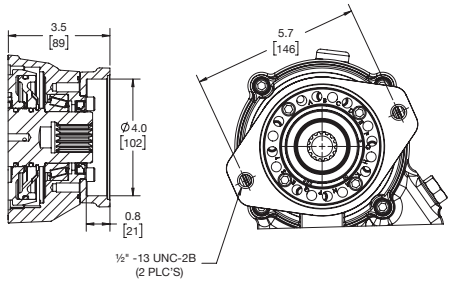

"BS" OUTPUT – SAE "B" ⅞"-13T Shaft SAE "B" 2-Bolt
"PS" OUTPUT – SAE "BB" 1.0"-15T, SAE "B" 2-Bolt

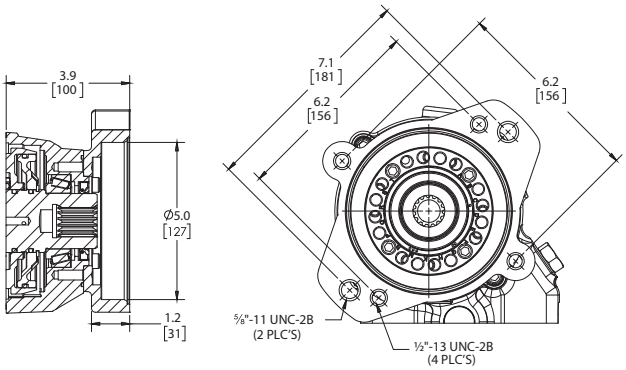

"CC" OUTPUT – SAE "C" 1¼"-14T, SAE "C" 2- & 4-Bolt

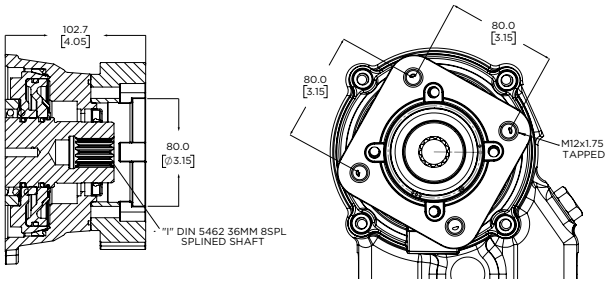

"II" OUTPUT - DIN 5462
"2I" OUTPUT – DIN 5462 EURO with M12 Tap Hole

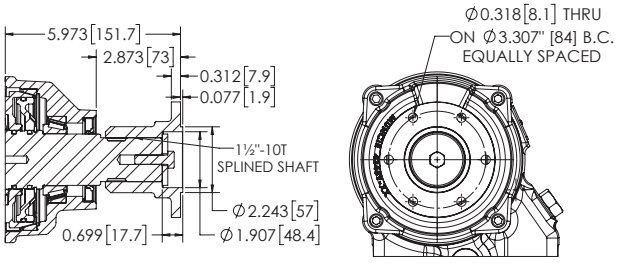

"X2" OUTPUT – 1½"-10T, DIN Companion Flange

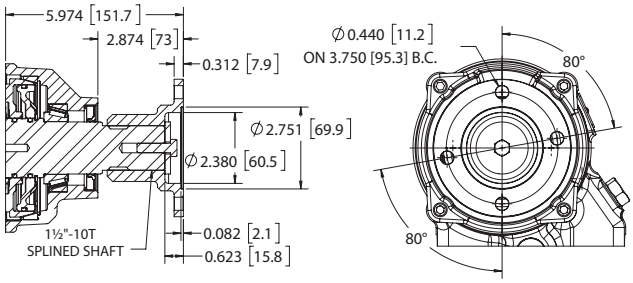

"X4" OUTPUT – 1½"-10T, 1410 Companion

Notes

Muncie® Power Products
A Member of the Interpump Group

201 East Jackson Street, Muncie, Indiana 47305
800-367-7867 • Fax: 765-284-6991 • info@munciepower.com

Specifications are subject to change without notice. Visit www.munciepower.com for warranties and literature. All rights reserved. © Muncie Power Products, Inc. (2021)

SP21-01 (Rev. 01-24)